RBI®

RELIABLE. BOLD. INNOVATIVE.

TORUS®
WATERTUBE

Boiler & Water Heater Manual

Installation and Operation Instructions

Stainless Steel Water Tube Gas Boilers (WB) & Water Heaters (WW)

Models 300, 350, 400, 500, 650, 800, 1000, 1251, 1501, 1751, 2001, 2501 & 3001

Also read and follow:

HeatNet Control Manual

DESIGN CERTIFIED

AHRI CERTIFIED® www.ahridirectory.org

CERTIFIED

ASME H & HLW

C US NSF/ANSI 372

⚠WARNING This manual is intended only for use by a qualified heating installer/technician. Read and follow this manual, all supplements and related instructional information provided with the boiler/water heater. Install, start and service the boiler/water heater only in the sequence and methods given in these instructions. Failure to do so can result in severe personal injury, death or substantial property damage.

⚠WARNING **Do not use the boiler/water heater during construction.** Construction dust and particulate, particularly drywall dust, will cause contamination of the burner, resulting in possible severe personal injury, death or substantial property damage. The boiler/water heater can only be operated with a dust-free air supply. Follow the instruction manual procedures to duct air to the boiler/water heater air intake. If the boiler/water heater has been contaminated by operation with contaminated air, follow the instruction manual guidelines to clean, repair or replace the boiler/water heater if necessary.

⚠CAUTION Affix these instructions near to the boiler/water heater. Instruct the building owner to retain the instructions for future use by a qualified service technician, and to follow all guidelines in the User's Information Manual.

10/2026 Copyright 2022 Mestek, Inc.

⚠WARNING If the information in this manual is not followed exactly, a fire or explosion may result causing property, personal injury or loss of life.

Do not store or use gasoline or other flammable vapors and liquids in the vicinity of this or any other appliance.

WHAT TO DO IF YOU SMELL GAS:

- **Do not try to light any appliance.**
- **Do not touch any electrical switch. Do not use any phone in your building.**
- **Immediately call your gas supplier from a phone outside of the building. Follow the gas supplier's instructions.**
- **If you cannot reach your gas supplier, call the fire department.**

Installation and service must be performed by a qualified installer, service agency or the gas supplier.

⚠WARNING Failure to properly vent this unit can cause excessive amounts of carbon monoxide resulting in severe personal injury or death!

⚠CAUTION Do not use automotive anti-freeze in the boiler waterways. If the use of anti-freeze is necessary an anti-freeze specifically formulated for hydronic heating systems must be used or damage to the boiler may occur voiding the warranty!

DESIGNED AND TESTED ACCORDING TO A.S.M.E. BOILER AND PRESSURE VESSEL CODE, SECTION IV FOR A MAXIMUM ALLOWABLE WORKING PRESSURE OF 160 PSI, 1103 kPa WATER.

INSTALLER, THESE INSTRUCTIONS TO BE AFFIXED ADJACENT TO THE BOILER/WATER HEATER.

CONSUMER, RETAIN THESE INSTRUCTIONS FOR FUTURE REFERENCE PURPOSES.

CONTENTS

Before Your Start ..... page 2
Ratings & Capacities ..... page 3
Location ..... page 3
Combustion Air & Ventilation ..... page 3
Venting Guidelines ..... page 5
Common Vent Systems ..... page 21
General Piping Requirements ..... page 26
Heating System Piping ..... page 28
Domestic Water Supply Piping ..... page 32
Condensate Piping ..... page 34
Gas Supply Piping ..... page 34
Electrical Wiring ..... page 35
Boiler Operation ..... page 37
Operating Instructions ..... page 37
Sequence of Operation ..... page 41
Checking, Adjustment & Operation ..... page 41
Ignition Troubleshooting ..... page 46
Diagnostics ..... page 46
Maintenance ..... page 47
Replacement Parts ..... page 55
Start-Up ..... page 73
Mass Code ..... page 75
Warranty ..... page 76

BEFORE YOU START

This manual covers the application, installation, operation and maintenance of a Torus series boiler/water heater. To obtain the safe, dependable, efficient operation and long life for which this boiler was designed, these instructions must be read, understood and followed. Installation must comply with all local, state, provincial and national codes.

The Torus boiler/water heater series has been design certified by CSA for use with natural gas under the latest revision of ANSI-Z21.10.3/CSA 4.3, Gas Water Heaters, ANSI-Z21.13/CSA 4.9, Gas-Fired Low Pressure Steam and Hot Water Boilers. Each unit has been constructed and hydrostatically tested for a maximum working pressure of 160 psi, 1103 kPa, in accordance with Section IV of the A.S.M.E. Boiler and Pressure Vessel Code.

All aspects of the boiler/water heater installation must conform to the requirements of the authority having jurisdiction, or, in the absence of such requirements, to the National Fuel Gas Code, ANSI Z223.1/NFPA 54-latest revision. Where required by the authority having jurisdiction, the installation must conform to the Standard for Controls and Safety Devices for Automatically Fired Boilers, ANSI/ASME CSD-1.

In Canada, the installation must be in accordance with the requirements of CSA B149.1 or .2, Installation Code for Gas Burning Appliances and Equipment.

If installed in the Commonwealth of Massachusetts, you MUST FOLLOW the additional instructions contained in RBI's instruction sheet MACODE-3. Which is located in the back of this manual.

The owner should maintain a record of all service work performed with the date and a description of the work done. Include the name of the service organization for future reference.

For technical assistance please contact RBI at 833-265-5371. For sales and other technical assistance contact RBI manufacturer's representative at 877-316-5074 or www.rbiwaterheaters.com. Please have model and serial number of the equipment in question available.

RATINGS & CAPACITIES

Before installing the Torus boiler/water heater check the rating plate to ensure that the unit has been sized properly for the job. Also ensure that the unit has been set up for the type of gas available at the installation site. Other important considerations are the availability of an adequate electrical supply, fresh air for combustion and a suitable vent system.

BOILER/WATER HEATER LOCATION

1. Locate the boiler/water heater in an area that provides good access to the unit. Servicing may require the removal of jacket panels. Allow the minimum clearances between adjacent construction and the boiler/water heater as listed in Table 1.

NOTICE Service clearances are not mandatory, but are recommended to ensure ease of service should it be required.

Table 1 - Clearances

	Clearance to Combustibles		Service Clearance*	
	in	*mm*	**in**	*mm*
Top	**6**	*153*	**6***	*153*
Back	**6**	*153*	**24**	*610*
Left Side	**1**	*25*	**1***	*25*
Right Side	**1**	*25*	**1***	*25*
Front	**6**	*153*	**36**	*914*
Flue	**6**	*153*		

*Provide 24 in/610 mm clearance at either the top or one of the sides.

2. An optimum site will be level, central to the piping system, close to a chimney or outside wall and have adequate fresh air for combustion. Ensure that the unit is level from front to back and from side to side. Electrical and electronic components must be protected from exposure to water during operation and maintenance. DO NOT install this boiler/water heater in a location that would subject any of the gas ignition and other electronic components to direct contact with water or excessive moisture during operation or servicing.

3. Ensure that the floor is structurally sound and will support the weight of the boiler/water heater.

NOTICE **The Torus may be installed directly on combustible flooring, but never on carpeting.**

4. Locate the boiler in an area that will prevent water damage to adjacent construction should a leak occur or during routine maintenance.

5. DO NOT place this boiler in a location that would restrict the introduction of combustion air into the unit or subject it to a negative pressure, see the "COMBUSTION AIR & VENTILATION" and "GENERAL VENTING GUIDLINES".

6. ***NEVER*** place this boiler in a location that would subject it to temperatures at or near freezing.

⚠WARNING Never store combustible materials, gasoline or any product containing flammable vapors or liquids in the vicinity of the boiler. Failure to comply with this warning can result in an explosion or fire causing extensive property damage, severe personal injury or death!

COMBUSTION AIR & VENTILATION

⚠WARNING This boiler/water heater must be supplied with combustion air in accordance with Section 9.3, Air for Combustion & Ventilation, of the latest revision of the National Fuel Gas Code, ANSI Z223.1/NFPA 54 and all applicable local building codes. Canadian installations must comply with CSA B149.1 or .2 Installation Code for Gas Burning Appliances and Equipment, or applicable provisions of the local building codes. Failure to provide adequate combustion air for this boiler can result in excessive levels of carbon monoxide which can result in severe personal injury or death!

To operate properly and safely this boiler/water heater requires a continuous supply of air for combustion. ***NEVER*** store objects on or around the boiler/water heater!

⚠CAUTION Combustion air contaminated with fluoro carbons or other halogenated compounds such as cleaning solvents and refrigerants will result in the formation of acids in the combustion chamber. These acids will cause premature failure of the boiler/water heater voiding the warranty!

⚠CAUTION If the boiler/water heater is operated while the building is under construction it must be protected from wood, concrete, sheet rock and other types of dust. Failure to properly protect the unit from construction dust will damage the unit voiding the warranty!

Buildings will require the installation of a fresh air duct or other means of providing make-up air if the intake air option isn't used. Any building utilizing other gas burning appliances, a fireplace, wood stove or any type of exhaust fan must be checked for adequate combustion air when all of these devices are in operation at one time. Sizing of an outside air duct must be done to meet the requirements of all such devices.

⚠WARNING Never operate the Torus in an environment subjected to a negative pressure unless it is Direct Vented. Failure to comply with this warning can result in excessive levels of carbon monoxide causing severe personal injury or death!

All Air From Inside The Building

If the boiler/water heater is to be located in a confined space the minimum clearances listed in Table 1 must be maintained between it and any combustible construction. When installed in a confined space without the intake air option two permanent openings communicating with an additional room(s) are required. The combined volume of these spaces must have sufficient volume to meet the criteria for an unconfined space. The total air requirements of all gas utilization equipment, fireplaces, wood stoves or any type of exhaust fan must be considered when making this determination. Each opening must have a minimum free area of **1 in²/1000 Btu/hr**, *2200 mm²/kW* based on the total input rating of ALL gas utilization equipment in the confined area. Each opening must be no less than **100 in²**, *64,516 mm²* in size. The upper opening must be within **12 in**, *300 mm* of, but not less than **3 in**, *80 mm* from, the top of the enclosure. The bottom opening must be within **12 in**, *300 mm* of, but not less than **3 in**, *80 mm* from, the bottom of the enclosure.

All Air From Outside The Building

When installed in a confined space without the intake air option two permanent openings communicating directly with, or by ducts to, the outdoors or spaces that freely communicate with the outdoors must be present. The upper opening must be within **12 in**, *300 mm* of, but not less than **3 in**, *80 mm* from, the top of the enclosure. The bottom opening must be within **12 in**, *300 mm* of, but not less than **3 in**, *80 mm* from, the bottom of the enclosure.

Where directly communicating with the outdoors or communicating with the outdoors through vertical ducts, each opening shall have a minimum free area of **1in²/ 4000 Btu/hr**, *550 mm²/kW* of the total input rating of all of the equipment in the enclosure.

Where communicating with the outdoors through horizontal ducts, each opening shall have a minimum free area of **1 in²/2000 Btu/hr,** *1100 mm²/kW* of the total input rating of all of the equipment in the enclosure.

When ducts are used, they must have the same cross-sectional area as the free area of the opening to which they connect.

Table 2 - Make-up Air Duct Sizing

Required Cross Sectional Duct Area						
Input (MBH)	1/4 in, 6.4 mm Wire Screen		Metal Louvers		Wooden Louvers	
	in²	cm²	in²	cm²	in²	cm²
0300	**75**	*484*	**100**	*645*	**300**	*1934*
0350	**87**	*561*	**117**	*754*	**350**	*2257*
0400	**100**	*645*	**133**	*858*	**400**	*2579*
0500	**125**	*806*	**167**	*1077*	**500**	*3226*
0650	**150**	*968*	**200**	*1290*	**600**	*3870*
0800	**182**	*1174*	**242**	*1561*	**725**	*4676*
1000	**213**	*1374*	**284**	*1832*	**850**	*5483*
1250	**313**	*2019*	**416**	*2684*	**1250**	*8065*
1500	**375**	*2419*	**500**	*3226*	**1500**	*9677*
1750	**437**	*2819*	**583**	*3761*	**1750**	*11290*
2000	**500**	*3226*	**667**	*4303*	**2000**	*12903*
2500	**635**	*4031*	**833**	*5382*	**2500**	*16127*
3000	**750**	*4838*	**1000**	*6452*	**3000**	*19354*

When calculating the free area necessary to meet the make-up air requirements of the enclosure, consideration must be given to the blockage effects of louvers, grills and screens.

Screens must have a minimum mesh size of **1/4 in**, *6.4 mm*. If the free area through a louver or grill is not known ducts should be sized per Table 2.

Direct Intake Air Option - General

This configuration provides combustion air directly to the boiler/water heater's air intake using a dedicated pipe when using the direct vent option. See combustion air connector location and optional RBI Air Intake Adapter, Figure D. Combustion air can be drawn in horizontally through an outside wall or vertically through the roof, see Figures 3, 4, 5 & 6. It must be sized per Table 3.

Single wall galvanized smoke pipe, single wall aluminum pipe, flexible aluminum pipe, PVC or CPVC pipe can be used for the intake air pipe.

Table 3 - Intake Air Pipe Sizing

Model Size	Pipe Diameter	
	in	mm
0300	**5**	*127*
0350	**5**	*127*
0400	**5**	*127*
0500	**5**	*127*
0650	**5**	*127*
0800	**5**	*127*
1000	**5**	*127*
1251	**5**	*203*
1501	**8**	*203*
1751	**8**	*203*
2001	**8**	*203*
2501	**8**	*254*
3001	**8**	*254*

NOTICE The maximum equivalent length for the combustion air intake pipe is 100 ft, 30.5 m.

.

NOTICE A (male x male) crimped galvanized transition pipe (Not Provided) is required when connecting schedule 40 PVC/CPVC combustion air duct to the boiler/water heater intake collar.

NOTICE All joints in metal intake air systems must be secured using corrosion resistant fasteners and sealed using a suitable Silicone caulk. If PVC or CPVC is used, the joints must be cleaned with a suitable solvent and connected using a solvent based PVC cement. The intake air system MUST be supported by the building structure not the boiler/water heater.

Direct Intake Air Option - Vertical
The maximum equivalent length for the vertical intake air pipe is **100 ft**, *30.5 m*. Each 90° mitered elbow and the intake air cap are equal to **10 ft**, *3.3 m* of straight pipe. If 90° long sweep elbows are installed use the manufacturers recommended equivalent length.

A listed, nonrestrictive intake air cap must be used. The intake air cap must terminate as shown in Figure 4. The penetration point in the roof must be properly flashed and sealed.

Direct Intake Air Option - Horizontal
The maximum equivalent length for the horizontal intake air pipe is **100 ft**, *30.5 m*. Each 90° mitered elbow and the intake air terminal are equal to **10 ft**, *3.3 m* of straight pipe. If 90° long sweep elbows are installed use the manufacturers recommended equivalent length.

Horizontal runs that exceed **5 ft**, *1.5 m* must be supported at **3 ft**, *0.98 m* intervals with overhead hangers. The intake air terminal must terminate as shown in Figures 2, 3 or 5.

GENERAL VENTING GUIDELINES

⚠WARNING The vent installation must be in accordance with Part 7, Venting of Equipment, of the National Fuel Gas Code, ANSI Z223.1/NFPA 54-latest revision or applicable provisions of the local building codes. Canadian installations must comply with CSA B149.1 or .2 Installation Code. See Figure E for added clarity. Improper venting can result in excessive levels of carbon monoxide which can result in severe personal injury or death! Boiler shall not be connected to a chimney flue serving a separate appliance, designed to burn solid fuel.

All vent systems must be fully supported by the building structure and not by the boiler/water heater. Appropriate thimbles and fire-stops must be used where required.

⚠WARNING Improper installation of common positive pressure vent systems can result in excessive levels of carbon monoxide which can cause severe personal injury or death!

NOTICE For Category II and IV appliances the vent shall not terminate:
1) over public walkways; or
2) near soffit vents or crawl spaces or other areas where condensate or vapor could create a nuisance or hazard or cause property damage; or
3) where condensate vapor could cause damage or could be detrimental to the operation of regulators, relief valves, or other equipment.

NOTICE A barometric damper or blast gate as required, must be installed if a Category II vertical vent system produces a negative draft in excess of **0.10 in**, *2.5 mm* WC at the flue outlet. Size the vent system per local codes and the vent pipe manufactuers requirements, using generally accepted engineering practices.

VENT SYSTEM OPTIONS

The Torus may be vented the following ways:

1) **PVC/CPVC NON-METALIC VENT -** Category IV - (Page 10)
2) **CONCENTRIC TERMINATION (MODELS 300-500 ONLY) -** Category IV - (Page 11)
3) **POLYPROPYLENE NON-METALIC VENT -** Category IV - (Page 13)
4) **DIRECT VENT POSITIVE PRESSURE -** Category IV - (Page 14)
5) **SIDE WALL VENT POSITIVE PRESSURE,** Category IV - (Page 18)
6) **VERTICAL VENT POSITIVE PRESSURE - C**ategory IV - (Page 18)
7) **COMMON MULTIPLE BOILER VERTICAL VENT NEGATIVE PRESSURE,** Category II - (Page 19)
8) **OUTDOOR VENTING -** (Page 25)

The Torus, fitted with a Non-metallic vent adapter, includes a HeatNet flue temperature sensor. This sensor provides over temperature protection for the vent system. Should the temperature of the flue gas ever approach the heat deflection temperature of the vent, HeatNet will shut down the Torus before the flue temperature can exceed a safe limit.

⚠WARNING Use (Table 4) for the maximum Category (IV) equivalent vent length and the equivalent length per fitting. Table 4 - "Category IV Equivalent Length per Fitting" chart is meant as a guideline for preliminary sizing.

Table 4 - Category IV Maximum Equivalent Vent Length & Equivalent Length per Fitting - SS/PVC/PP

Model/Outlet Diameter	0300	0350	0400	0500	0650	0800	1000	1251	1501	1751	2001	2501	3001
	4"	4"	4"	4"	6"	6"	6"	8"	8"	8"	8"	10"	10"
Maximum Equivalent Length	100'	100'	100'	100'	100'	100'	100'	100'	100'	100'	100'	100'	100'
Standard Tee	20 ft	20 ft	20 ft	20 ft	25 ft	25 ft	25 ft	30 ft	30 ft	30 ft	30 ft	40 ft	40 ft
Boot Tee	10 ft	10 ft	10 ft	10 ft	15 ft	15 ft	15 ft	15 ft	15 ft	15 ft	15 ft	20 ft	20 ft
Cap - Low Res (UL)	7 ft	7 ft	7 ft	7 ft	10 ft	10 ft	10 ft	15 ft	15 ft	15 ft	15 ft	15 ft	15 ft
45° w/Bird Screen	7 ft	7 ft	7 ft	7 ft	10 ft	10 ft	10 ft	10 ft	10 ft	10 ft	10 ft	15 ft	15 ft
Elbow - 90°	7 ft	7 ft	7 ft	7 ft	10 ft	10 ft	10 ft	10 ft	10 ft	10 ft	10 ft	15 ft	15 ft
Elbow - 45°	5 ft	5 ft	5 ft	5 ft	5 ft	5 ft	5 ft	5 ft	5 ft	5 ft	5 ft	7 ft	7 ft
Concentric Terminal	7 ft	7 ft	7 ft	7 ft	N/A	N/A	N/A	N/A	N/A	N/A	N/A	N/A	N/A
*Equivalent lengths based (5X) pipe diameters straight length between fittings.													

⚠WARNING Use only listed manufacturers/materials (Table 5), terminations (Table 6), and transition adapters/terminals (Table 7). Do not mix vent systems of different manufacturers. The chimney systems manufacturer's installation instructions must be followed.

NOTICE The maximum equivalent length for the combustion air intake pipe is 100 ft, 30.5 m.

Table 5 - Approved Vent Manufacturers/Materials

Approved Stainless Steel Vent Manufacturers (CAT II/IV)	
Make	**Model**
M&G DuraVent	FasNSeal Vent
Heatfab	Saf-T Vent
Metal-Fab	CORR/GUARD
Security Chimneys	Secure Seal
Schebler Chimney Systems	e Vent
Z-Flex	Z-Vent
Jeremias	DWGV/SWGV
Stainless Steel Vent material must be certified to UL 1738 for installations in the United States, and certified to ULC S636 for installations in Canada.	
Approved Polypropylene Vent Manufacturers (CAT IV)	
Make	**Model**
M&G DuraVent	PolyPro
Centrotherm	InnoFlue
Polypropylene Vent material must be certified to UL 1738 for installations in the United States, and certified to ULC S636 for installations in Canada.	
Approved Concentric Vent Manufacturer (CAT IV)	
Make	**Model/Standard**
IPEX	IPEX (System 1738) - PVC
	IPEX (System 636) - PVC
	IPEX (System 636) - CPVC
IPEX System 1738 & 636 Pipe, Fittings, Termination Kits and Cements are certified to be installed as a system.	
Approved PVC/CPVC Vent Pipe and Fittings (CAT IV)	
Material	**Standard**
PVC Schedule 40	ANSI/ASTM - D1785 Pipe, D2466 Fittings, D2564 Cement/Primer
CPVC Schedule 40	ANSI/ASTM - F441 Pipe, F439 Fittings, F493 Cement/Primer
Use of cellular core PVC , CPVC, is prohibited. In Canada, PVC & CPVC vent pipe, fittings and cement/primer must be certified to ULC S636.	

Table 6 - Approved Intake/Exhaust Terminations (CAT IV - Direct Vent, Side Wall)*

Exhaust 90 deg	Exhaust Tee	Exhaust 45 deg **	Exhaust Straight	Exhaust Non Metalic Vent Option	Exhaust Termination Hood
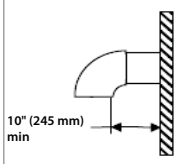	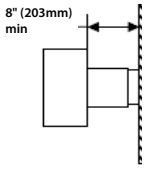	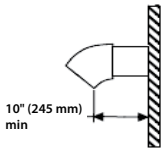	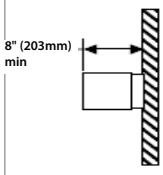	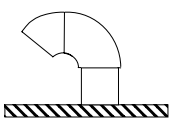	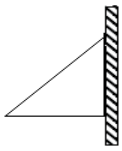

*with bird screen

**8:1 maximum turndown

Table 7 - Approved Manufacturers Boiler/Water Heater Transition Adapters/Concentric Termination Kits

Stainless Steel Adapters

Model Size	DuraVent		Metal-Fab		Z-Flex	
	Transition Adapter	Flue	Transition Adapter	Flue	Transition Adapter	Flue
0300	FSA-4PVCM-4FNSF 810005545	FasNSeal	No Adapter Required	Corr/Guard	2SVSPVCO4	Z-Vent
0350						
0400						
0500						
0650	FSA-6PVCM-6FNSF 810005231		6FCGPVCA		2SVSPVCO6	
0800						
1000						
1251	DS8FFNSAU		8FCSLCA		2SVSAFNS08	
1501						
1751						
2001						
2501	DS10FFNSAU		10FCSPKA2		2SVSAFNS10	
3001						

Model Size	Heatfab		Security Chimneys (Secure Seal)		Jeremias	
	Transition Adapter	Flue	Transition Adapter	Flue	Transition Adapter	Flue
0300	9401PVC	Saf-T Vent	SS4PVCU	Secure Seal	SWGV-4-PVC	DWGV/SWGV
0350						
0400						
0500						
0650	9601PVC		SS6PVCU		SWGV-6-PVC	
0800						
1000						
1251	9801MAD		SS8FFNSAU SSD8FFNSAUK		SWGV8-RCIS	
1501						
1751						
2001						
2501	91001MAD		SS10FFNSAU SSD10FFNSAUK		SWGV10-RCIS	
3001						

PVC/CPVC Adapters (US Only)

Model Size	Transition Adapter
0300	N/A (PVC/CPVC Ready)
0350	
0400	
0500	
0650	
0800	
1000	
1251	RBI Adapter (75-0553-002)* (8"x8")
1501	
1751	
2001	
2501	RBI Adapter (75-0553-003)* (10"x10")
3001	

* Includes: adapter, Jumo high limit, HeatNet stack temperature sensor, and misc. wiring.

Table 7 - Approved Manufacturers Boiler/Water Heater Transition Adapters/Concentric Termination Kits -Continued

Polypropylene Adapters

Model Size	DuraVent		Centrotherm	
	Transition Adapter	Flue	Transition Adapter	Flue
0300	4PPS-04PVCM-4PPF 810004207	PolyPro	ISAAL0404	InnoFlue
0350				
0400				
0500				
0650	6PPS-06PVCM-6PPF 810004281		ISAAL0606	
0800				
1000				
1251	RBI (75-0554-002)** (8"x8")		RBI (75-0555-001)** (8"x8")	
1501				
1751				
2001				
2501	N/A		RBI (75-0555-002)** (10"x10")	
3001				

Concentric Roof or Wall Terminal

Model Size	IPEX Termination Kit		
	IPEX1738 - PVC	IPEX 636 - PVC	IPEX 636 - CPVC
0300	397021	196021	197021
0350			
0400			
0500			

Combustion Air Intake Adapter

Model Size	Adapter Assembly
0300	74-1060-001
0350	
0400	
0500	74-1060-002
0650	74-1060-003
0800	74-1060-004
1000	74-1060-005
1251	74-1060-006
1501	74-1060-007
1751 & 2001	74-1060-008
2501 & 3001	74-1060-009

** Includes: adapter, high limit snap switch, and misc. wiring.

⚠WARNING Use only listed manufacturers/materials (Table 5), terminations (Table 6), and transition adapters/terminals (Table 7). Do not mix vent systems of different manufacturers. The chimney systems manufacturer's installation instructions must be followed.

PVC/CPVC NON-METALIC VENT

This section is specific to using schedule 40 PVC/CPVC pipe (Table 5) as the vent system for the Torus. The instructions contained in the Torus Installation and Operation Manual, including all applicable Combustion Air & Ventilation and Venting instructions must be followed. Torus Models (300-1000) are fitted with a PVC/CPVC adapter standard, Torus Models (1251-3001) are fitted with a stainless steel adapter - standard. Models (1251-3001) with PVC/CPVC option require a factory supplied non-metallic RBI vent adapter - Table 7, Figure A.

⚠WARNING Venting of the Torus with PVC/CPVC material requires the PVC/CPVC adapter provided with the appliance. The vent system must conform to local codes and/or the latest edition of the National Fuel Gas Code ANSI Z223.1/NFPA 54. Failure to properly vent this product can result in CO poisoning causing severe personal injury or death! In Canada, PVC and CPVC vent pipe, fittings and cement primer must be certified to ULC-S636.

PVC/CPVC VENT SYSTEM INSTALLATION

⚠WARNING Never insulate or encapsulate the PVC/CPVC vent system or overheating and failure of the vent system may occur. The PVC/CPVC vent system must be exposed to ambient air and readily visible for inspection. Failure to properly vent this product can result in CO poisoning causing severe personal injury or death! Exception: Per NFPA54 Secion 12.6.8: The remaining space surrounding a chimney liner, gas vent, special gas vent or plastic piping installed within a masonry chimney shall not be used to vent another appliance.

The PVC/CPVC vent adapter has been engineered to directly accept PVC/CPVC vent pipe. The internal gasket in the vent adaptor will form a gas and water tight seal. No glues or sealants are required at this connection. Slide the required length of PVC/CPVC pipe into the vent adaptor and tighten the ring clamp to secure it in place. The vent system must be sized per Table 4.

PVC/CPVC VENT PIPE PREPARATION & ASSEMBLY

⚠CAUTION Only schedule 40 PVC/CPVC pipe as listed in Table 5 and sized per Table 4 must be used. The use of heavier wall pipe may prevent the Torus from operating properly! In Canada, PVC & CPVC vent pipe, fittings and cement/primer must be certified to ULC S636.

1. Cut pipe ends squarely and remove all burrs, ridges and foreign matter using the appropriate tools and materials.

NOTICE Failure to remove burrs or ridges will result in the cement in the fitting socket being scraped from the socket surface producing a dry joint which will have a high probability of failure.

2. Before applying any cement dry fit pipe and fittings together to ensure that the parts fit properly.
3. Disassemble dry fitted parts and clean the pipe and fitting surfaces to be joined with a PVC/CPVC cleaner. Surfaces to be joined must be free of dirt, moisture, oil and other foreign matter.

⚠WARNING All primers, cleaners and cements must meet all local codes. Before using primers, cleaners and cements, stir or shake well, making sure the contents are liquid. Do not use if found to be lumpy or in a jelly-like state. Do not add solvents or thinners to reclaim thickened or lumpy material. Primers and cement should be NSF and/or UPC listed. Failure to use proper materials when venting this product can result in CO poisoning causing severe personal injury or death.

⚠WARNING Use of cellular core PVC (ASTM F891), cellular core CPVC, or Radel (polyphenolsulfone) in venting systems shall be prohibited.

Covering non-metallic vent pipe and fittings with thermal insulation shall be prohibited.

⚠WARNING Primers, cleaners and cements are extremely flammable and harmful or fatal if swallowed. Always store primers, cleaners and cements in a cool, dry, well ventilated place. Do not store them near heat, sparks or flames. Keep containers closed when not in use. Wear impervious clothing while handling. Do not smoke, eat or drink while handling primers, cleaners and cements. Wash thoroughly after handling and before eating. Wear eye protection when handling. The harmful vapors can be absorbed through the skin and may irritate eyes and skin. If inhaled, get fresh air and seek medical attention if ill feelings persist. In case of eye and/ or skin contact, immediately flush with plenty of water for 15 minutes and seek medical attention if irritation persists. If swallowed, drink water, do not induce vomiting and call a physician or poison control center immediately. Failure to

read and observe all safety information printed on primer, cleaner and cement containers can result in severe personal injury or death!

NOTICE Cleaners and primers are intended for different functions and should not be considered interchangeable. Verify with vent material manufacturer for specific requirements.

4. Apply a coat of primer to the pipe and fitting surfaces that will be joined.
5. Apply a thin coat of cement to the fitting surface that will be joined making sure not over apply the cement which can cause puddling inside the fitting.
6. Apply a thin coat of cement to the pipe surface that will be joined making sure to completely coat the area so it is free of voids.
7. QUICKLY assemble the parts while the cement is fluid! If the cement dries before the parts are assembled, re-coat the surfaces with cement then assemble them.
8. Push the end of the pipe completely into the fitting socket so it bottoms out and rotate the fitting or pipe at least 1/4 turn to achieve proper cement spread. Make sure the parts are in the correct orientation before the cement cures. The cement bonds by melting the PVC/CPVC so once the joint is made it cannot be disassembled.
9. Hold the pipe and fitting for 30 seconds to allow the joint to sufficiently cure then carefully clean off any excess cement with a cloth.
10. Follow the PVC/CPVC cement manufacturer's instructions to allow the connections sufficient time to cure before putting any stress on the joint.

Figure A - PVC/CPVC Vent Adapter (Models 1251-3001)

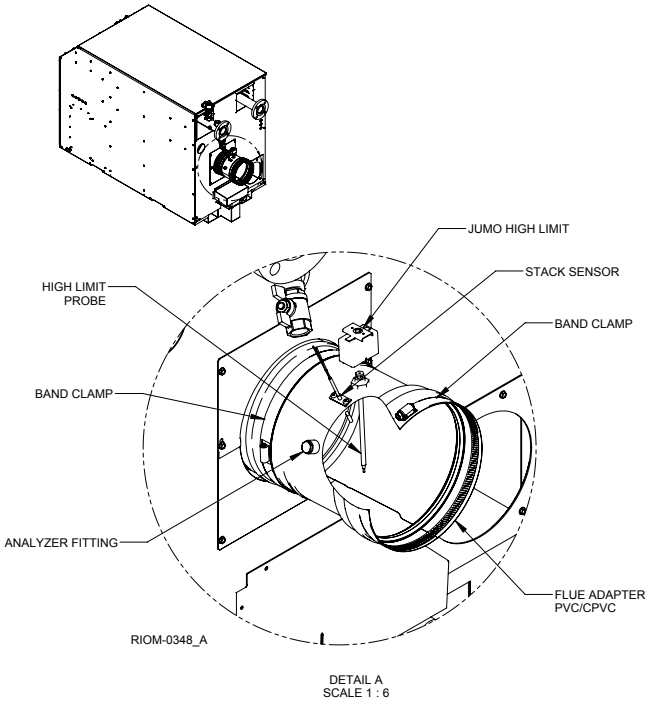

CONCENTRIC TERMINATION OPTION (Models 300-500 only) - Figures 1 & 2

Torus has been approved for use with IPEX System 1738 & System S636 Concentric termination kits - Table 5 & 7. Both combustion air and vent pipes must attach to the termination kit. The kit must terminate outside the structure and must be installed per the manufacturers installation instructions. IPEX System 1738 & 636 Pipe, Fittings, Termination Kits and Cements are certified to be installed as a system. The manufacturer's Concentric vent kit installation instruction must be followed. Termination kit must be located and installed in accordance with local building codes.

SIDEWALL TERMINATION - CONCENTRIC VENT

When vented horizontally the vent and air intake must terminate an outside wall. The termination location and clearances per manufactures instructions must be followed. The total equivalent length of pipe must be within the lengths noted in Table 4. For multiple installations, each appliance must be individually vented.

VERTICAL TERMINATION - CONCENTRIC VENT

When vented vertically the termination kit is installed through the roof. The termination location and clearances must be followed. The total equivalent length of pipe must be within the lengths noted in Table 4. For multiple installations, each appliance must be individually vented.

⚠WARNING The Concentric vent kit must not be modified. The manufacturer's Concentric vent kit installation instruction must be followed. Do not connect any other appliance to the vent pipe or multiple boilers to a common vent pipe. Airflow restriction will occur and may cause improper operation. The concentric vent must be installed where vapors will not damage nearby shrubs, plants or air conditioning equipment. Avoid locations where prevailing winds could cause freezing of condensate/flue products resulting in ice buildup on building surfaces. Do not terminate above any door or window. Condensate can freeze, causing ice formations. Failure to comply could result in severe personal injury, death, or substantial property damage.

Figure 1 - Concentric w/Single Termination

Pitched Roof Termination

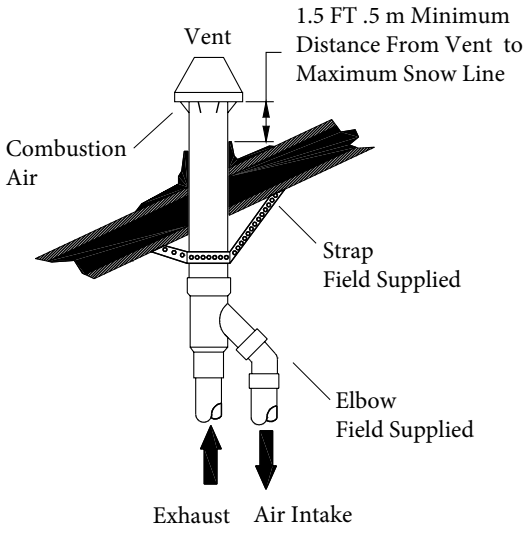

Flat Roof Termination

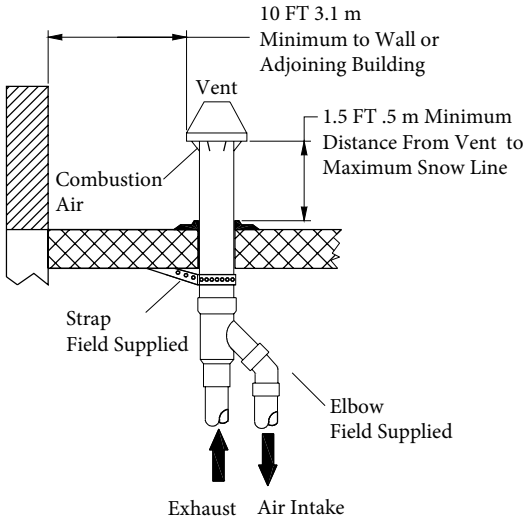

Side Wall Termination

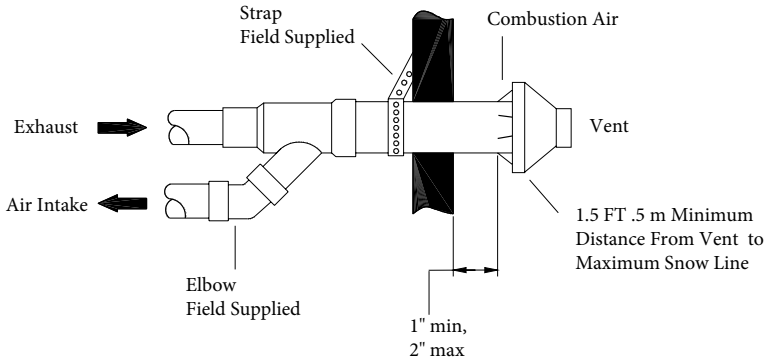

Figure 2 - Concentric w/Multiple Terminations

Side Wall Termination

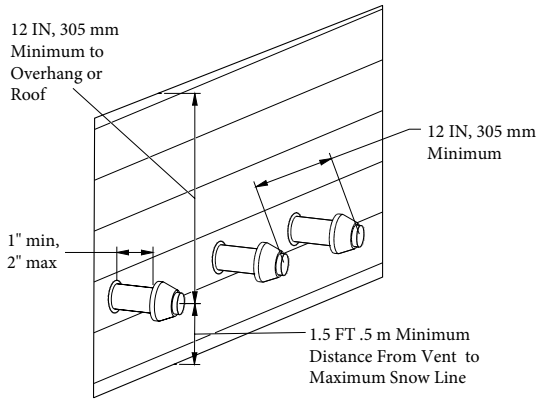

Roof Termination

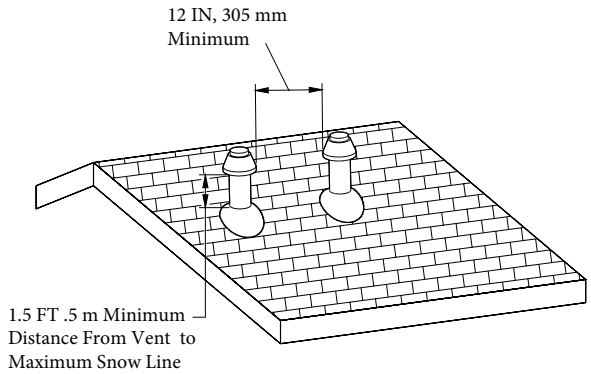

POLYPROPYLENE NON-METALIC VENT OPTION

Torus has been approved for use with the Polypropylene vent manufacturers listed in Table 5. The instructions contained in this section of the Installation and Operation Manual, including all applicable Combustion Air & Ventilation and Venting instructions must also be followed. Polypropylene vent options require a non-metallic vent adapter - Table 7, Figure B&C and the system sized per Table 4..

⚠WARNING Venting of the Torus with polypropylene material requires the factory supplied Non Metalic Polypropylene adapter Table 7. The vent system must be certified to UL 1738 for installations in the United States, ULC S636 for installations in Canada. The vent system must conform to local codes and/or the latest edition of the National Fuel Gas Code ANSI Z223.1/ NFPA 54. In Canada, the installation must be in accordance with the requirements of CSA B149.1 or .2, Installation Code; For Gas Burning Appliances and Equipment. Failure to properly vent this product can result in CO poisoning causing severe personal injury or death!

VENT ADAPTER INSTALLATION

⚠CAUTION Improper installation of the Polypropylene vent adapter can cause pooling of corrosive condensate and result in premature failure of the vent adapter voiding the manufacturer's warranty!

MANUFACTURERS VENT SYSTEM INSTALLATION

⚠WARNING The vent manufacturer's installation instructions MUST be followed. Mixing vent systems of different manufacturers is prohibited. Failure to use the proper materials when venting this product can result in CO poisoning causing severe personal injury or death!

⚠WARNING Use of cellular core PVC (ASTM F891), cellular core CPVC, or Radel (polyphenolsulfone) in venting systems shall be prohibited.

Covering non-metallic vent pipe and fittings with thermal insulation shall be prohibited.

MANUFACTURERS VENT TERMINALS

When vented horizontally the vent and air intake systems must be terminated using standard Polypropylene fitting, Table 8. Each termination must utilize a Bird Screen insert as indicated below. The minimum distance from the wall must be maintained as shown in the Table 6.

When vented vertically the vent and air intake systems should be terminated using standard 45° and 90° polypropylene elbow fittings with a 1/4 in stainless steel bird-screen insert.

Table 8 Polypropylene Flue Terminal*

Centrotherm InnoFlue*		
Terminal Type	Nominal Diameter	Centrotherm Part #
Tee	4" (101 mm)	ISTT0420
	6" (152 mm)	ISTT0620
	8" (203 mm)	ISTT0820
	10" (254 mm)	ISTT1020
	12" (305 mm)	ISTT1220
45° Elbow	4" (101 mm)	ISEL0445
	6" (152 mm)	ISEL0645
	8" (203 mm)	ISEL0845
	10" (254 mm)	ISEL1045
	12" (305 mm)	ISEL1245
90° Elbow	4" (101 mm)	ISEL0487
	6" (152 mm)	ISEL0687
	8" (203 mm)	ISEL0887
	10" (254 mm)	ISEL1087
	12" (305 mm)	ISEL1287
Bird Screen	4" (101 mm)	IASSS04
	6" (152 mm)	IASSS06
	8" (203 mm)	IASSS08
	10" (254 mm)	IASSS10
	12" (305 mm)	IASSS12

* For material contact a Centrotherm representative.

Duravent Polypro**		
Terminal Type	Nominal Diameter	DuraVent Part #
Tee	4" (101 mm)	FSTT4
	6" (152 mm)	FSTT6
	8" (203 mm)	FSTT8
90° Elbow	4" (101 mm)	FSBS4
	6" (152 mm)	FSBS6
	8" (203 mm)	FSBS8

** Terminations require use of a PolyPro-FasNSeal adapter (FSA-OXM-XPPF). For material contact a DuraVent representative.

DIRECT VENT POSITIVE PRESSURE, CATEGORY IV

In this configuration the boiler/water heater blower is used to push the flue products to the outdoors while drawing combustion air from the outdoors. The INTAKE AIR OPTION instructions under the COMBUSTION AIR & VENTILATION SECTION must be followed! The approved vent manufacturers/materials used in positive pressure vent systems are listed in Table 5. The vent system must conform to local codes and/or the latest edition of the National Fuel Gas Code ANSI Z223.1/ NFPA 54. In Canada, the installation must be in accordance with the requirements of CSA B149.1 or .2, Installation Code; For Gas Burning Appliances and Equipment. Failure to properly vent this product can result in CO poisoning causing severe personal injury or death! The vent system must be both gas and water tight. All seams and joints in metal pipes must be joined and sealed in accordance with Tables 4, 5, 6, & 7 and the vent system manufacturer's instructions.

Horizontal Direct Vent Systems - Figures 3 & 4

To maximize the performance of the overall vent system locate 90° elbows as far from the boiler/water heater as possible and from one another. For best results, horizontal vent systems should be as short and straight as possible.

When horizontal vent runs exceed **5 ft**, *1.5m* they must be supported at **3 ft**, *0.98 m* intervals with overhead hangers. If any part of a single wall metal vent system passes through an unheated space it must be insulated with insulation rated for **400°F**, *212°C*.

Horizontal vent systems shall terminate at least **4 ft**, *1.3 m* below, **4 ft**, *1.3 m* horizontally from or **1 ft**, *0.23 m* above any door, window or gravity air inlet into any building. It must not terminate less than **4 ft**, *1.3 m* horizontally from, and in no case above or below, unless a **4 ft**, *1.3 m* horizontal distance is maintained, from electric meters, gas meters, regulators and relief equipment and not less than **7 ft**, *2.3 m* above adjacent public walkway.

Avoid terminal locations likely to be affected by winds, snowdrifts, people and pets. Protect building materials and vegetation from degradation caused by the flue gases.

When running horizontal combustion air and venting for single or multiple units, exhaust and combustion air terminals must be installed on the same plane (outside wall) in order to prevent pressure differences due to prevailing winds. In cold climates, double-wall or insulated inlet pipe recommended to prevent condensation.

Vertical Direct Vent Systems - see Figure 5

If any part of a single wall metal vent system passes through an unheated space it must be insulated with insulation rated for 400°F, 204°C. Structural penetrations must be made using approved fire-stops.

The top of a vertical vent system must extend at least 5-1/2 ft, 1.8 m above the roof surface that it passes through, 4 ft, 1.3 m above the intake air cap, see Figure 4. In addition the vent system must conform to the dimensions shown in Figure 4. The penetration point in the roof must be properly flashed and sealed.

The vent system must be gas tight. All seams and joints in metal pipes must be joined and sealed in accordance with the vent system manufacturer's instructions.

Combination Direct Vent Systems - see Figure 6

The boiler/water heater can be vented vertically with the intake air piped horizontally through an outside wall. Follow the instructions in the INTAKE AIR OPTION - HORIZONTAL GUIDELINES. Also follow the general instructions in the COMBUSTION AIR & VENTILATION and GENERAL VENTING GUIDELINES sections.

Figure B - DuraVent Polypropulene Vent Adapter (Models 1251-3001)

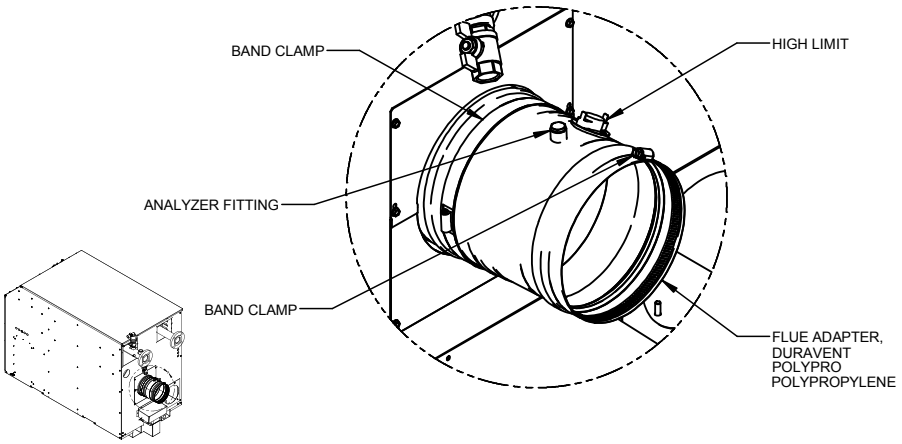

Figure C - Centrotherm Polypropylene Vent Adapter (Models 1251-3001)

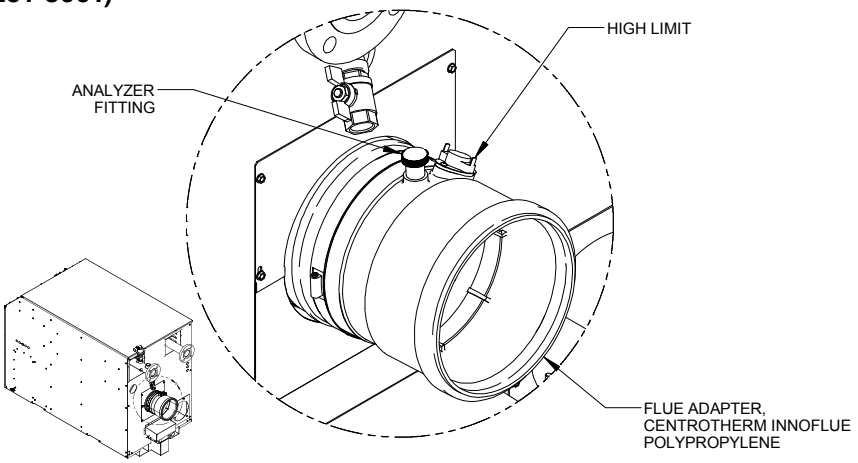

Figure D - Direct Vent Combustion Air Intake Location (Optional RBI Air Intake Adapter)

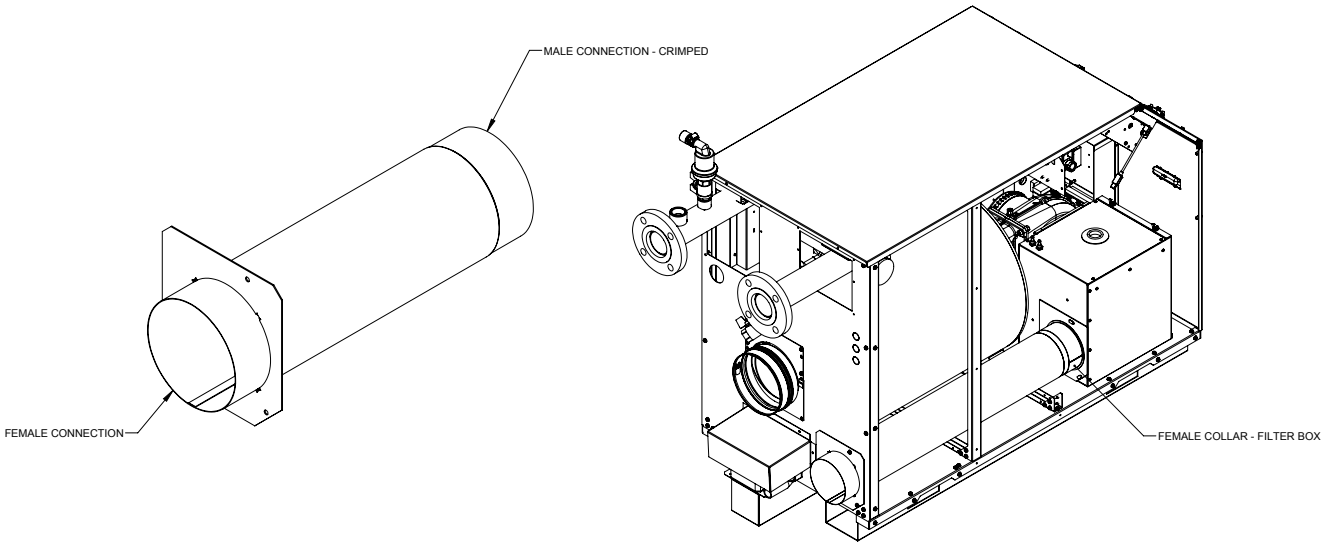

Figure 3 - Horizontal Air Intake and Venting for a Single Direct Vent System

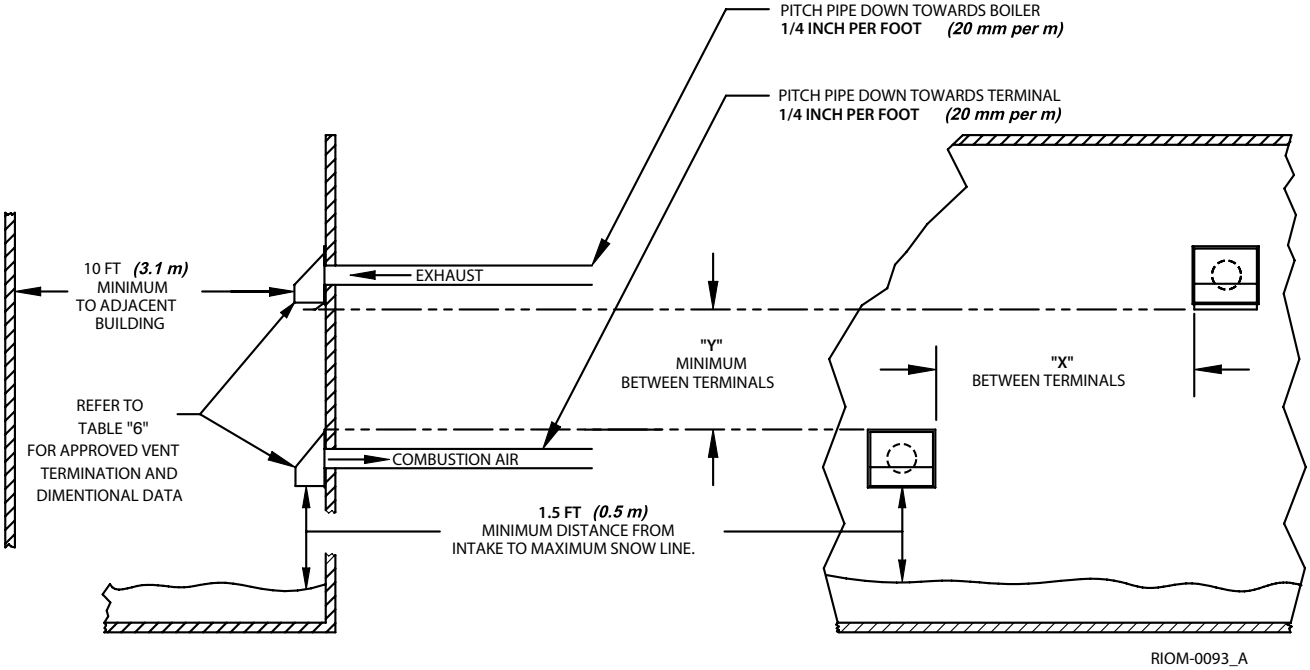

WARNING: When running horizontal combustion air and venting for single or multiple units, exhaust and combustion air terminals must be installed on the same plane (outside wall) in order to prevent pressure differences due to prevailing winds. In cold climates, double-wall or insulated inlet pipe recommended to prevent condensation.

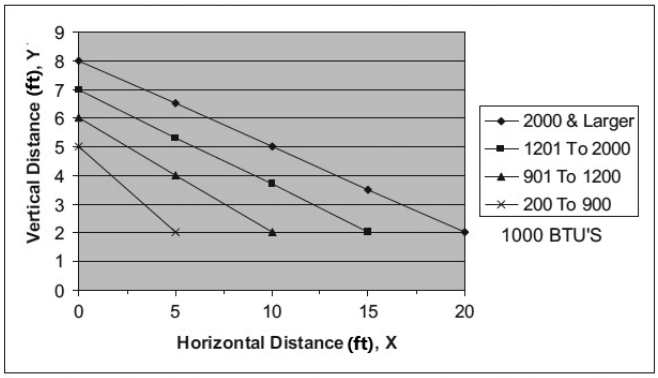

Figure 4 - Horizontal Air Intake and Venting for Multiple Direct Vent Systems

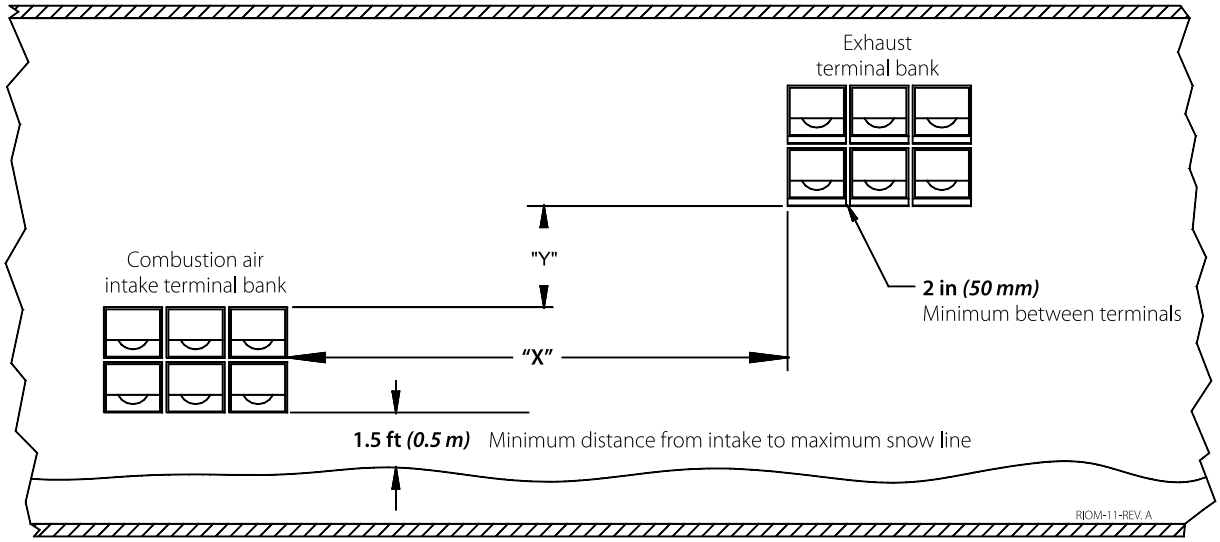

Figure 5 - Vertical Air Intake and Venting for Direct Vent System

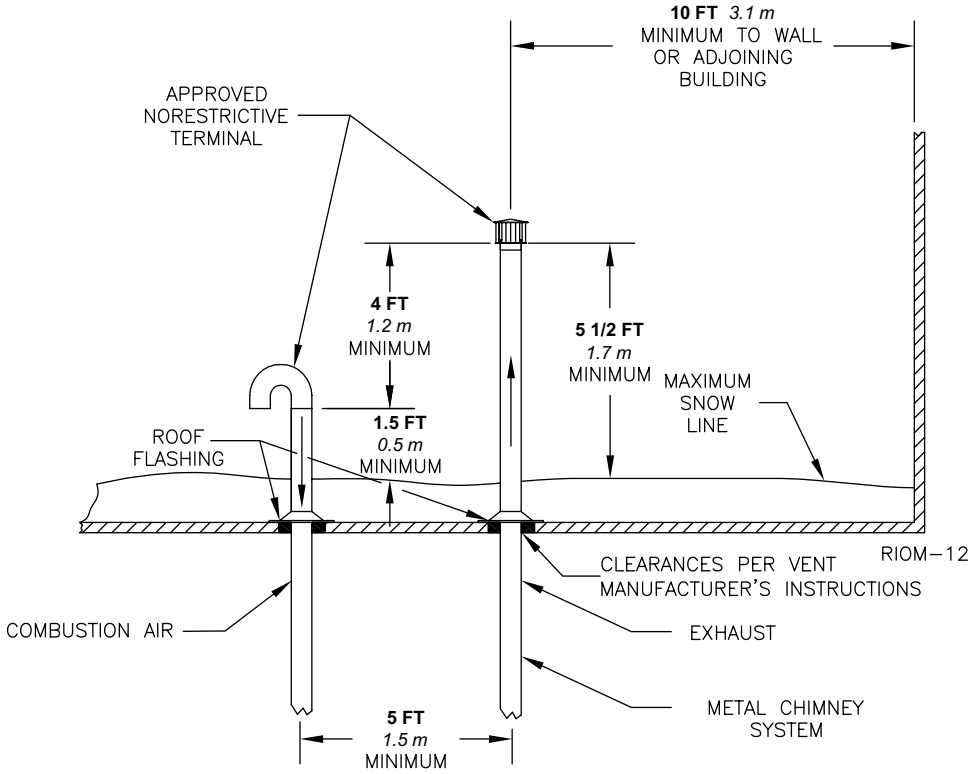

Figure 6 - Combination Direct Vent Systems

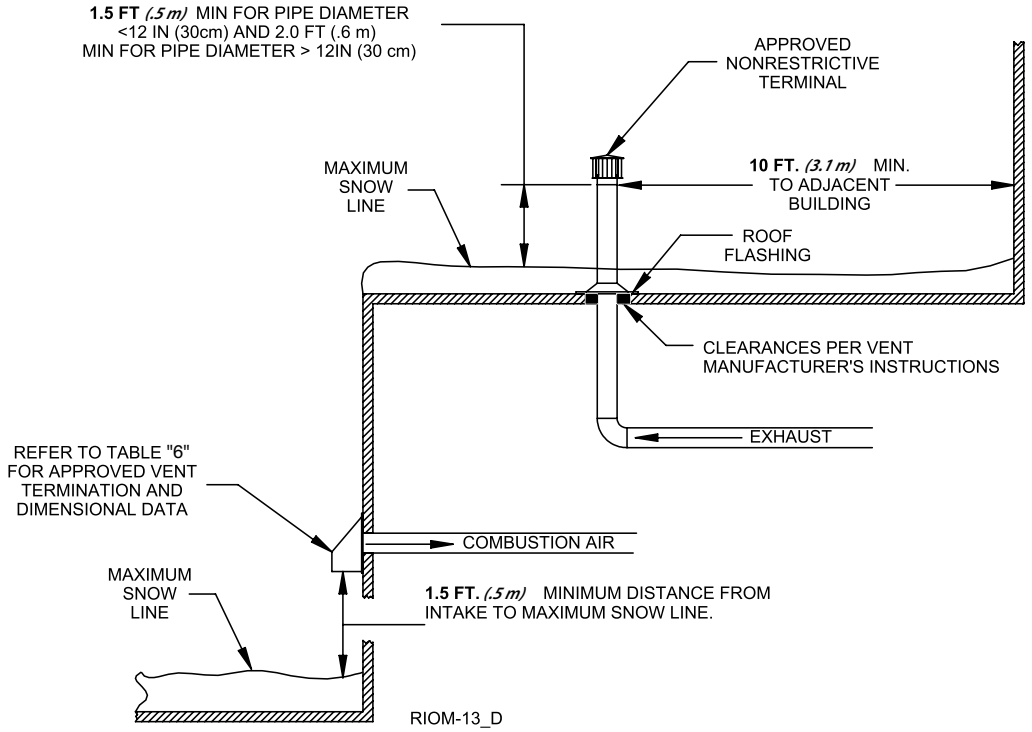

SIDE WALL VENT POSITIVE PRESSURE, CATEGORY IV

In this configuration the boiler/water heater blower is used to push the flue products horizontally to the outdoors, see Figure 7.

⚠WARNING To ensure proper operation, boilers/water heaters that are vented sidewall and use room air must not exceed a 6:1 turndown.

Figure 7 - Side Wall Venting

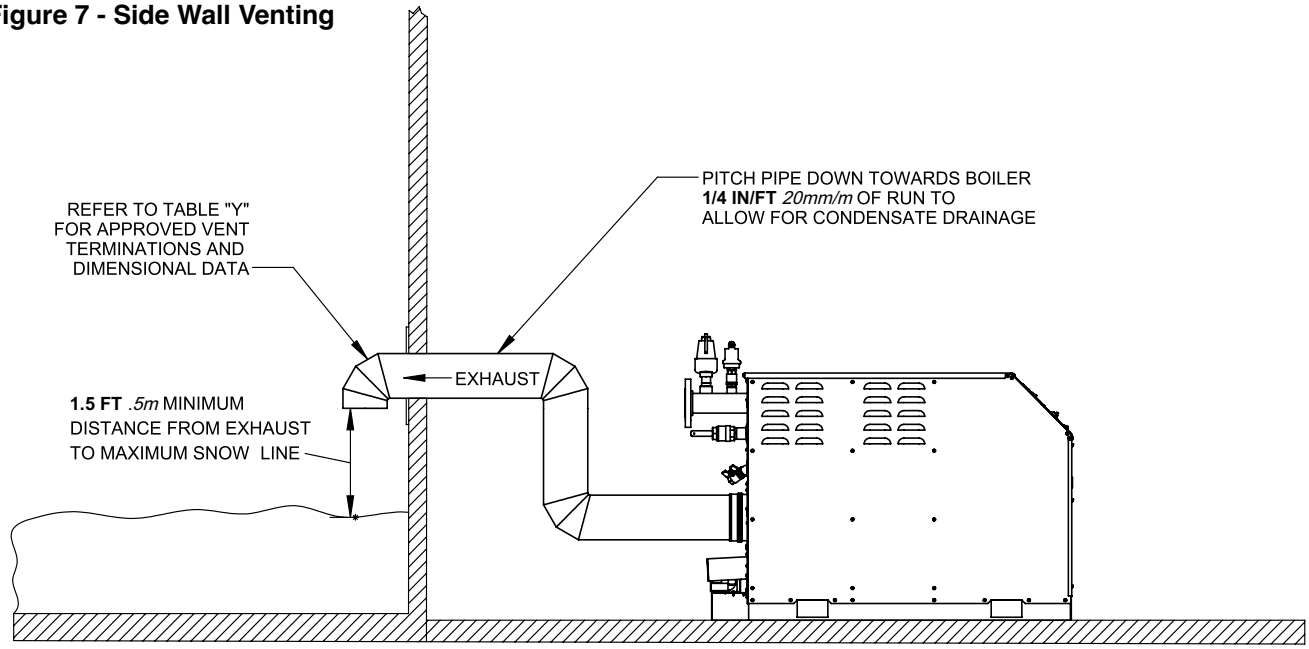

VERTICAL VENT POSITIVE PRESSURE - CATEGORY IV

In this configuration the boiler/water heater blower is used to push the flue products vertically to the outdoors, see Figure 8. The combustion air is taken from the space in which the unit is installed. The applicable instructions under the COMBUSTION AIR & VENTILATION and DIRECT VENT POSITIVE PRESSURE, CATEGORY IV sections must be followed!

NOTE: A CAT IV designation is based on a wet/positive pressure vent system. When venting vertically, the draft at the outlet of the appliance may go negative negating the CAT IV rating and operating as a CAT II vent system. Vertical systems must be engineered to include the draft effect of the vertical portion of the vent.

Figure 8 - Vertical Positive Pressure Venting

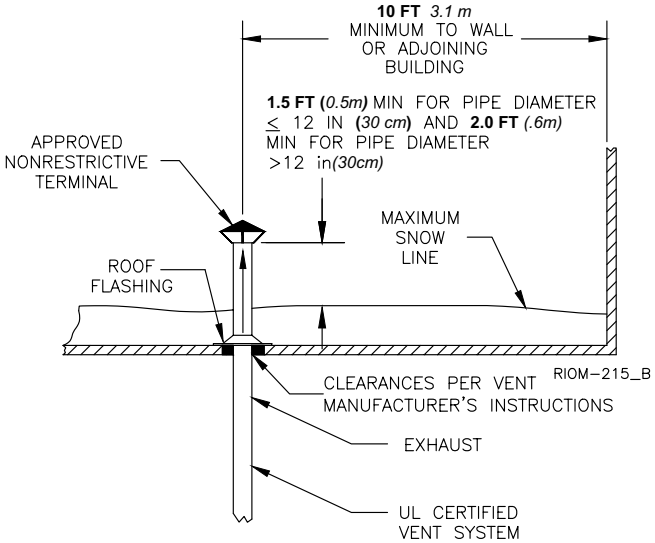

MULTIPLE BOILER VERTICAL VENT NEGATIVE PRESSURE - CATEGORY II

The Torus is listed as a Category II appliance when vented vertically into a UL 1738 listed chimney system, Figure 10. The chimney system must provide a negative pressure of 0.02 to 0.10 in, 0.51 to 2.5 mm WC at the boiler/water heater flue collar with the unit is running.

NOTICE A stainless steel metal chimney system certified to UL 1738 for installations in the United States, and certified to ULC S636 for installations in Canada must be used - Table 5. The chimney system manufacturer's installation instructions must be followed.

⚠WARNING Multiple boiler/water heater vent systems must be designed and verified by an engineered system. The vent system must prevent back-flow of exhaust gas through idle boilers.

When more than one appliance is connected to the same chimney system the system must be large enough to safely vent the combined output of all of the appliances. Table 9 lists the minimum riser connections.

⚠WARNING If an appliance using any type of a mechanical draft system operating under positive pressure is connected to a chimney flue, never connect any other appliances to this flue. Doing so can result in excessive levels of carbon monoxide which can cause severe personal injury or death!

Table 9 - Minimum Riser Connection, Negative Pressure

Model Size	Breech & Flue Diameter	
	in	*mm*
0300	**6**	*152*
0350	**6**	*152*
0400	**6**	*152*
0500	**6**	*152*
0650	**8**	*203*
0800	**8**	*203*
1000	**8**	*203*
1251	**10**	*254*
1501	**10**	*254*
1751	**10**	*254*
2001	**10**	*254*
2501	**12**	*305*
3001	**12**	*305*

NOTICE Vent system must be sized per an engineered system.

Vent Connections

Locate the boiler/water heater as close to the chimney system as possible. Use the shortest, straightest vent connector possible for the installation. If horizontal runs exceed **5 ft**, *1.5 m* they must be supported at **3 ft**, *0.9 m* intervals with overhead hangers. Use the appropriate vent connector of the same diameter as the flue collar to connect the boiler/water heater to a listed metal chimney system. Follow the chimney system manufacturer's instructions for proper assembly.

The vent system should be sloped up toward the chimney at a minimum rate of **1/4 in/ft**, *2 cm/m*.

Always provide a minimum clearance of **6 in**, *152 mm* between single wall vent pipe and any combustible materials.

⚠WARNING Failure to maintain minimum clearances between vent connectors and any combustible material can result in a fire causing extensive property damage, severe personal injury or death!

Figure 9 - Exit Cone

Exit cones are favorable when used to increase the velocity of the flue gas exiting the stack and, may also help, in cold climates, to reduce ice build-up. Exit cone terminations must be supplied by others, installed per manufacturer's instructions, and meet local and federal code.

generic exit cone

Figure 10 - Multiple Boiler Common Venting

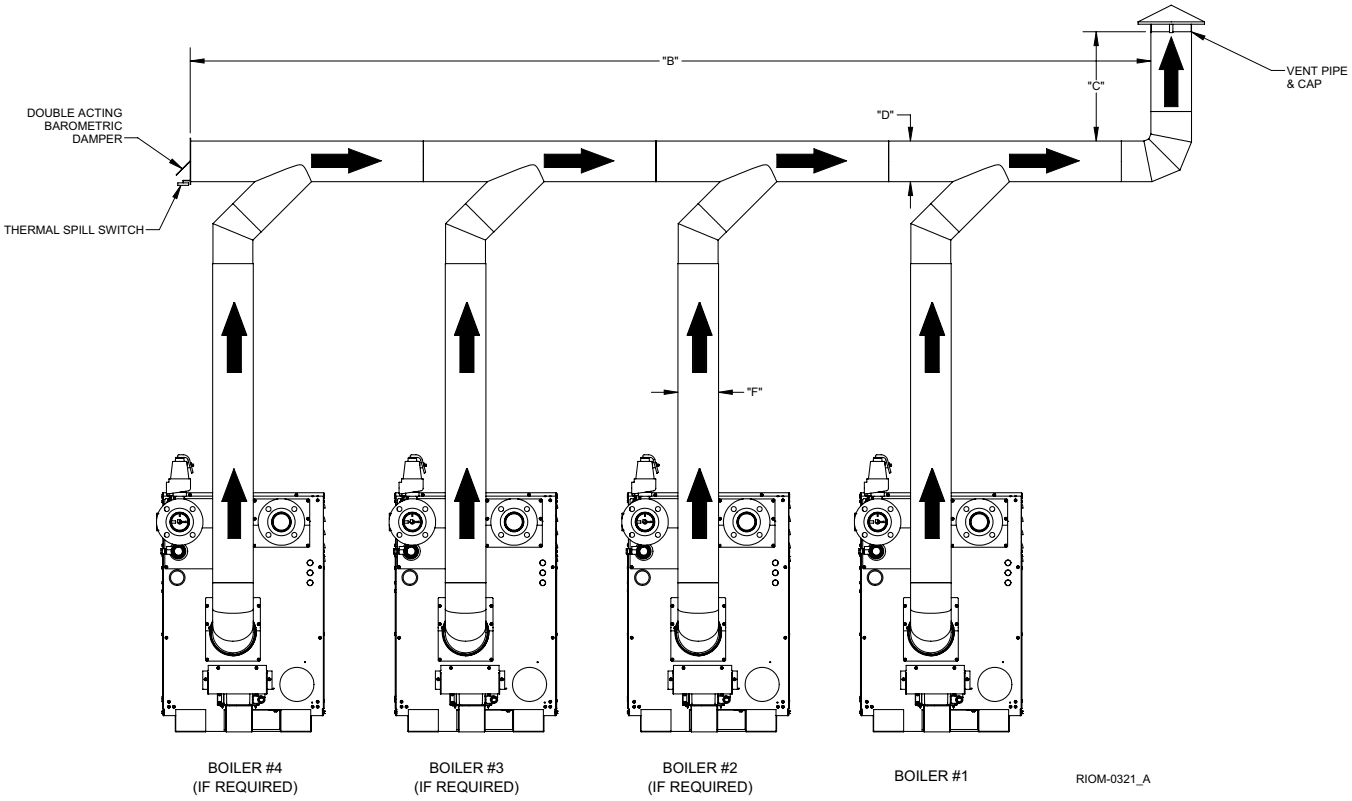

VERTICAL CHIMNEY VENTING - Vertical venting - multiple boiler/water heater installations. Individual boiler/water heater input is capable of firing up to a maximum (10:1 NG & 8:1 LP) turndown:

⚠WARNING It is recommended that the boiler/water heater nearest the vertical chimney be fired first when the horizontal distance exceeds 50% of the vertical distance. Refer to the HeatNet manual on how to select the lead boiler.

When sized for a (CAT II) configuration, a negative pressure of 0.02 to 0.10 inches WC is required in each boilers/water heaters riser when all boilers/water heaters are operating at full input. A barometer damper must be installed as illustrated. [Exception: if the vent system is designed using accepted engineering practices, and the design calculations prove there is no need for barometric dampers, the barometric dampers may be omitted.] When required by applicable codes, install a thermal spill switch on each barometric damper.

1. Connect each boiler/water heater riser to the common vent with a Y connection or Boot T only.
2. Install an approved vent cap at each vent termination.
3. Dimensions:
   B = breeching length
   C = chimney height
   D = breeching diameter
   F = riser diameter
   (No smaller than the dimension given in Table 4, page 6.)
4. Size the chimney and breeching per local codes and accordance with the National Fuel Gas Code, ANSI Z223.1/NFPA 54 and/ or the CSA B149.1, Natural Gas and Propane Installation Code (Current Editions), local codes and vent manufacturer's installation instructions. Size the chimney and breeching using generally accepted engineering practices. (Consult factory for vertical heights beyond 60 ft.)

EXISTING COMMON VENT SYSTEMS

If an existing boiler/water heater is removed from a common venting system, the common venting system may then be too large for the proper venting of the remaining appliances connected to it. At the time of removal of an existing boiler/water heater, the following steps shall be followed with each appliance remaining connected to the common venting system placed in operation, while the other appliances remaining connected to the common venting system are not in operation.

a) Seal any unused openings in the common venting system.

b) Visually inspect the venting system for proper size and horizontal pitch and determine there is no blockage or restriction, leakage, corrosion and other deficiencies which could cause an unsafe condition.

c) Insofar as is practical, close all building doors and windows and all doors between the space in which the appliances remaining connected to the common venting system are located and other spaces of the building. Turn on clothes dryers and any appliance not connected to the common venting system. Turn on any exhaust fans, such as range hoods and bathroom exhaust, so they will operate at maximum speed. Do not operate a summer exhaust fan for a boiler installation. Close fireplace dampers.

d) Place in operation the appliance being inspected. Follow the lighting instructions. Adjust thermostat so appliance will operate continuously.

e) After it has been determined that each appliance remaining connected to the common venting system properly vents when tested as outlined above, return doors, windows, exhaust fans, fireplace dampers and any other gas-burning appliance to their previous condition of use.

f) Any improper operation of the common venting system should be corrected so the installation conforms with the National Fuel Gas Code, ANSI Z223.1/NFPA 54. When resizing any portion of the common venting system, the common venting system should be resized to approach the minimum size as determined using the appropriate tables in Appendix F in the National Fuel Gas Code, ANSI Z223.1/ NFPA 54 and or CSA B149 Installation Codes.

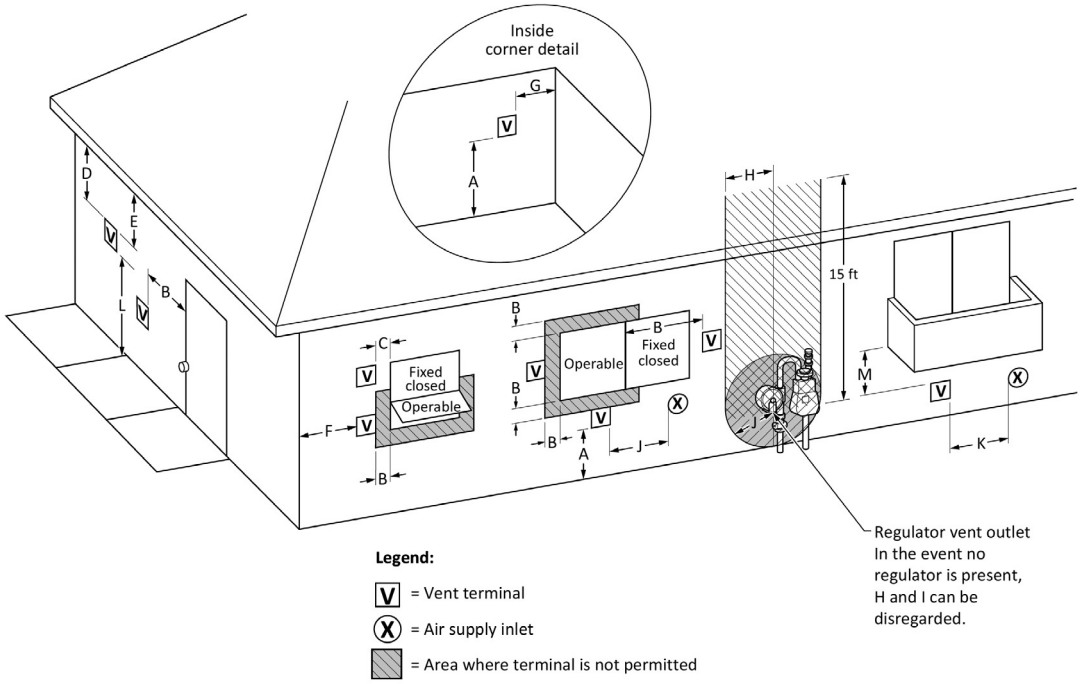

Figure E - Direct Vent Terminal Clearances

		Canadian Installations[1]	US Installations[2]
A =	Clearance above grade, veranda, porch, deck, or balcony	12 in (30 cm)	12 in (30 cm)
B =	Clearance to window or door that may be opened	6 in (15 cm) for appliances ≤ 10,000 Btuh (3 kW); 12 in (30 cm) for appliances > 10,000 Btuh (3 kW) and ≤ 100,000 Btuh (30 kW); 36 in (91 cm) for appliances > 100,000 Btuh (30 kW)	6 in (15 cm) for appliances ≤ 10,000 Btuh (3 kW); 9 in (23 cm) for appliances > 10,000 Btuh (3 kW) and ≤ 50,000 Btuh (15 kW); 12 in (30 cm) for appliances > 50,000 Btuh (15 kW)
C =	Clearance to permanently closed window	Per local installation codes	
D =	Vertical clearance to ventilated soffit located above the terminal within a horizontal distance of 2 ft (61 cm) from the center line of the terminal.		
E =	Clearance to unventilated soffit		
F =	Clearance to outside corner		
G =	Clearance to inside corner		
H =	Clearance to each side of center line extended above meter / regulator assembly	3 ft (91 cm) within a height of 15 ft (4.6m)	
I =	Clearance to service regulator vent outlet	3 ft (91 cm)	
J =	Clearance to nonmechanical air supply inlet to building or the combustion air inlet to any other appliance	6 in (15 cm) for appliances ≤ 10,000 Btuh (3kW); 12 in (30 cm) for appliances > 10,000 Btuh (3 kW) and ≤ 100,000 Btuh (30 kW); 36 in (91 cm) for appliances > 100,000 Btuh (30 kW)	6 in (15 cm) for appliances ≤ 10,000 Btuh (3kW); 9 in (23 cm) for appliances > 10,000 Btuh (3 kW) and ≤ 50,000 Btuh (15 kW); 12 in (30 cm) for appliances > 50,000 Btuh (15 kW)

Figure E - Direct Vent Terminal Clearances - Concluded

K =	Clearance to a mechanical air supply inlet	6 ft (1.83 m)	3 ft (91 cm) above if within 10 ft (3 m) horizontally
L =	Clearance above paved sidewalk or paved driveway located on public property	7 ft (2.13 m)†	7 ft (2.13 m) for mechanical draft systems (Category I appliances). Vents for Category II and IV appliances cannot be located above public walkways or other areas where condensate or vapor can cause a nuisance or hazard
M =	Clearance under veranda, porch, deck, or balcony	12 in (30 cm)‡	Per local installation codes

† A vent shall not terminate directly above a sidewalk or paved driveway that is located between two single family dwellings and serves both dwellings.

‡ Permitted only if veranda, porch, deck, or balcony is fully open on a minimum of two sides beneath the floor.

NOTES:

1) In accordance with the current CSA B149.1, Natural Gas and Propane Installation Code
2) In accordance with the current ANSI Z223.1/NFPA 54, National Fuel Gas Code
3) If locally adopted installation codes specify clearances different than those illustrated, then the most stringent clearances must prevail.

Figure E - Other Than Direct Vent Terminal Clearances

		Canadian Installations[1]	US Installations[2]
A =	Clearance above grade, veranda, porch, deck, or balcony	12 in (30 cm)	12 in (30 cm)
B =	Clearance to window or door that may be opened	6 in (15 cm) for appliances ≤ 10,000 Btuh (3 kW); 12 in (30 cm) for appliances > 10,000 Btuh (3 kW) and ≤ 100,000 Btuh (30 kW); 36 in (91 cm) for appliances > 100,000 Btuh (30 kW)	4 ft (1.2 m) below or to side of opening; 1 ft (300 mm) above opening
C =	Clearance to permanently closed window	Per local installation codes	
D =	Vertical clearance to ventilated soffit located above the terminal within a horizontal distance of 2 ft (61 cm) from the center line of the terminal		
E =	Clearance to unventilated soffit		
F =	Clearance to outside corner		
G =	Clearance to inside corner		
H =	Clearance to each side of center line extended above meter/regulator assembly	3 ft (91 cm) within a height of 15 ft (4.6m)	
I =	Clearance to service regulator vent outlet	3 ft (91 cm)	
J =	Clearance to nonmechanical air supply inlet to building or the combustion air inlet to any other appliance	6 in (15 cm) for appliances ≤ 10,000 Btuh (3kW); 12 in (30 cm) for appliances > 10,000 Btuh (3 kW) and ≤ 100,000 Btuh (30 kW); 36 in (91 cm) for appliances > 100,000 Btuh (30 kW)	4 ft (1.2 m) below or to side of opening; 1 ft (300 mm) above opening

Figure E - Other Than Direct Vent Terminal Clearances - Concluded

K =	Clearance to a mechanical air supply inlet	6 ft (1.83 m)	3 ft (91 cm) above if within 10 ft (3 m) horizontally
L =	Clearance above paved sidewalk or paved driveway located on public property	7 ft (2.13 m)†	7 ft (2.13 m) for mechanical draft systems (Category I appliances). Vents for Category II and IV appliances cannot be located above public walkways or other areas where condensate or vapor can cause a nuisance or hazard
M =	Clearance under veranda, porch, deck, or balcony	12 in (30 cm)‡	Per local installation codes

† A vent shall not terminate directly above a sidewalk or paved driveway that is located between two single family dwellings and serves both dwellings.

‡ Permitted only if veranda, porch, deck, or balcony is fully open on a minimum of two sides beneath the floor.

NOTES:

1) In accordance with the current CSA B149.1, Natural Gas and Propane Installation Code
2) In accordance with the current ANSI Z223.1/NFPA 54, National Fuel Gas Code
3) If locally adopted installation codes specify clearances different than those illustrated, then the most stringent clearances must prevail.

OUTDOOR VENTING

When installed outdoors the Torus Line must be fitted with the factory supplied outdoor hood, air intake adapter with filter and exhaust terminal, see Figure 11. Multiple units must be spaced per Figure 12.

The boiler/heater must be at least **2 ft,** *.62 m* from any door, window or gravity air inlet into any building and at least **3 ft,** *1 m* from any overhang unless local codes dictate differently.

Avoid locations where wind deflection off of adjacent walls, buildings or shrubbery might cause a downdraft. The unit(s) should be located at least 3 ft, 1 m from structures. Outdoor installations are not recommended in areas where the danger of snow blockage exists.

⚠CAUTION Do not place the boiler/water heater in a location that would subject it to runoff from adjacent buildings or damage may occur voiding the warranty!

Outdoor Installations

⚠WARNING The Torus Boiler/Water Heater is certified for outside installations in a temperate climate not subject to freezing temperatures.

1. The condensate traps located under the secondary heat exchanger and the vent pipe must be wrapped with heat tape to ensure the traps never drop below 32°F (0°C).
2. The vent pipe must be insulated to prevent freezing of condensate in the pipe.
3. The boiler and system must be filled with a propylene glycol/water antifreeze mixture not to exceed 50% glycol by volume.
4. All water piping exposed to low temperatures must be insulated.

Figure 11 - Outdoor Venting

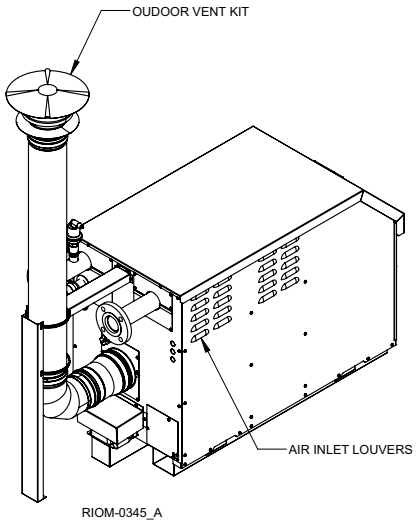

Figure 12 - Multiple Outdoor Units

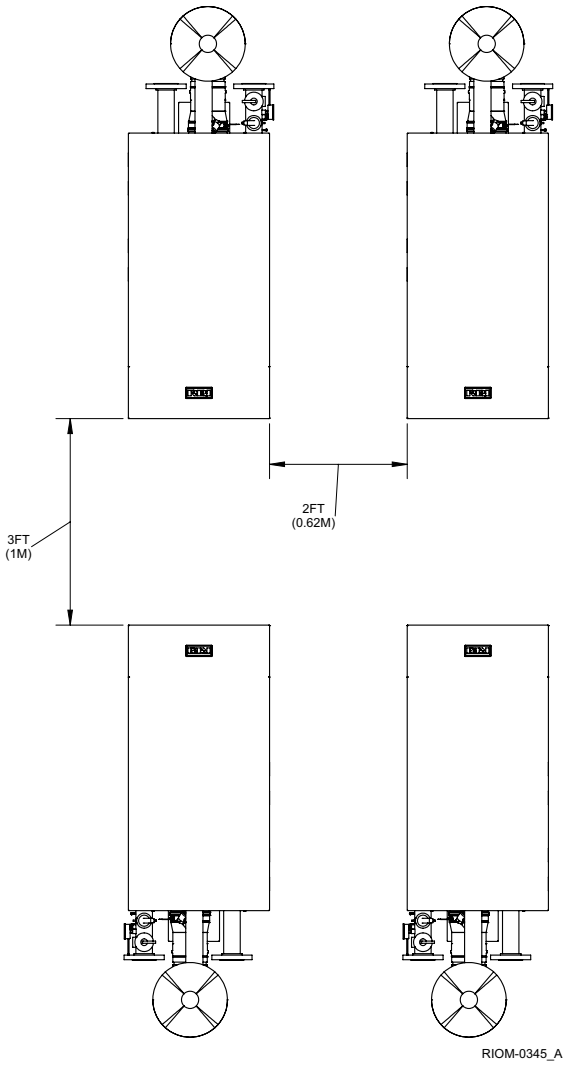

GENERAL PIPING REQUIREMENTS

CAUTION Improper piping of this boiler/water heater will void the manufacturer's warranty and can cause boiler/water heater failure resulting in flooding and extensive property damage!

NOTICE Shut off valves and unions should be installed at the inlet and outlet connections of the boiler/water heater to provide for isolation of the unit should servicing be necessary.

Relief Valve

Pipe the discharge of the pressure relief valve (Figure 13) per the "Heating System Piping/General Piping Requirements Section.

CAUTION Never install any type of valve between the boiler/water heater and the relief valve or an explosion causing extensive property damage, severe personal injury or death may occur!

Flow Switch

The flow switch is provided to prove flow is present through the boiler/water heater. The temperature rise across the primary heat exchanger must conform to the flow rates listed in Table 10 & 11 (boiler) and Table 12a (water heater). When replacing the SIKA flow switch, cut the paddle length per the trim locations noted in Table 10 (boiler) and Table 12a (water heater) and mount the switch so that the arrow on the switch body is in direction of the flow of fluid.

Freeze Protection

Installations in areas where the danger of freezing exists are not recommended unless proper freeze protection is provided. The following precautions MUST be observed:

1. A continuous flow of water through the unit MUST be maintained! The pump responsible for flow through the boiler must run continuously!
2. A propylene glycol/water mixture suitable for the minimum temperature that the unit will be exposed to must be used. The pump must be capable of producing a minimum of 15% more flow and overcoming a 20% increase in head loss. Domestic water systems must be isolated from the boiler by the use of a heat exchanger or other approved method.
3. If the unit must be shut off for any reason the electric, gas and water supplies MUST be shut off and the unit and its pump completely drained.

Figure 13 - Torus Water Tube Piping

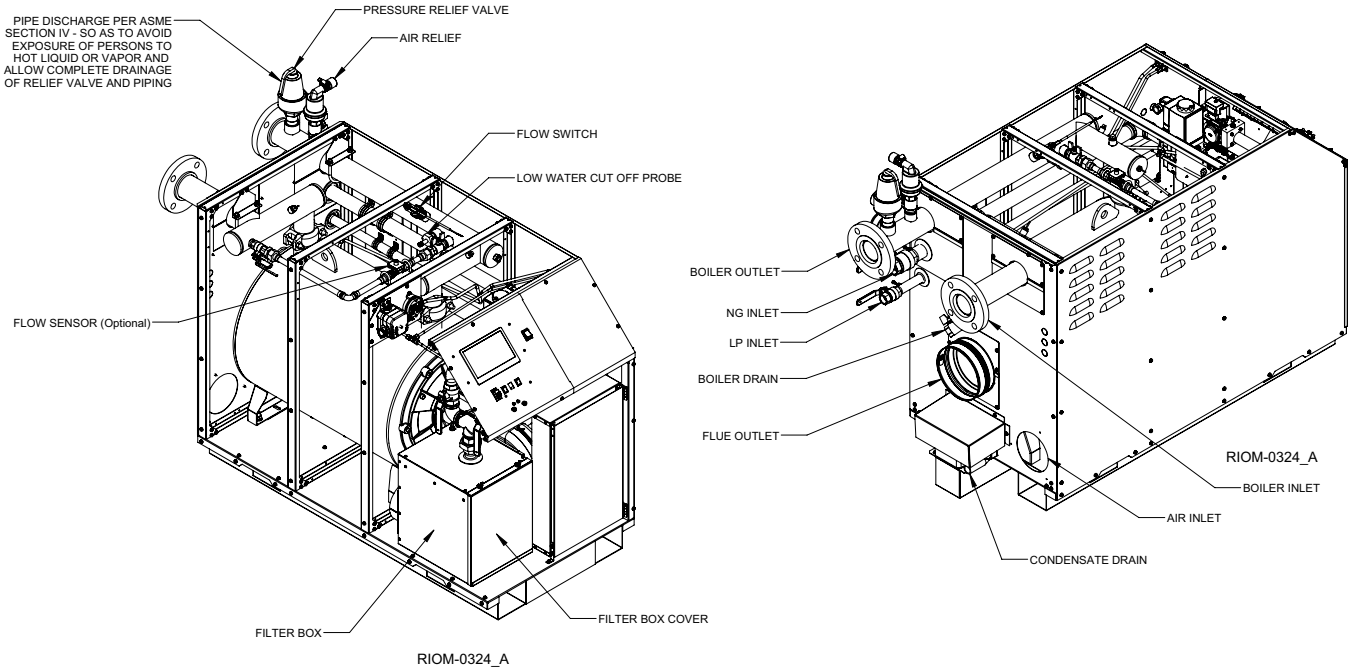

Flow Sensor (Optional)

The factory mounted SIKA flow sensor, as shown in Figure 13, is wired to prevent the boiler/water heater from firing unless there's adequate water flow, Table 10, through the unit.

NOTICE The SIKA flow sensor sends information to the HeatNet control and displays the water flow information in (gpm). The minimum flow settings are fully adjustable. The boiler will not operate if the (gpm) falls below the minimum value. If the system is using Glycol the % of glycol mixture must be entered. The SIKA Flow sensor is limited to **194°F**, 90°C water temperature, 145 psi operating pressure and a 50% glycol mixture. If the return water temperature rises above **194°F,** 90°C the boiler will shut down. For applications outside these requirements, please consult Manufacturer. Reference the HeatNet IOM for menu instructions.

Air Vent

The factory mounted air vent, as shown in Figure 13, is installed to automatically purge unwanted air from the boiler allowing the system to run more effectively.

NOTICE Please note that after installing in a new system or retrofitting an old, close the isolation valve installed upstream of the Air Vent prior to filling the system with water. Once the system has been properly filled open the Air Vent isolation valve for automatic operation. If this is not done, it is entirely possible that the internal float mechanism will become clogged open, causing the air vent to leak.

Table 10 - Temperature Rise Table

Model Size	Water Flow Rates (GPM)		SIKA Flow Switch Paddle Trim Mark Location
	Full/Min Input	Full Input	
	Min (gpm)	Max (gpm)	
0300	14.6	38.8	40
0350	16.9	45.0	30
0400	19.3	51.4	30
0500	24.1	64.3	20
0650	31.3	83.5	15
0800	38.5	102.5	15
1000	48.0	127.9	15
1251	61.5	164.1	15
1501	73.5	196.1	15
1751	86.4	172.8	15
2001	98.4	262.4	15
2501	120.3	320.8	15
3001	144.4	385.0	15

NOTICE In order to maintain boiler capacity, increase flow rates approximately (10%) and pump head (25%) for mixtures up to 50% glycol.

NOTICE Use the following equation to determine the boiler derate capacity when adjustments aren't made. (2012 ASHRAE Systems Handbook)

$$qw = 500*Q*(p/pw)*Cp*\Delta T$$

Where

qw = Total heat transfer rate, BTU/h
Q = flow rate, gpm
p = fluid density. lb/ft³
pw = density of water at 60°F, lb/ft³
Cp = specific heat of fluid, Btu/lb °F
ΔT = temperature difference, °F

Table 11 - Temperature Rise Table

Model	15 Deg f (Delta t)				20 Deg f (Delta t)			
	(gpm)		Drop (ft)		(gpm)		Drop (ft)	
	GPM	L/s	Ft	kPa	GPM	L/s	Ft	kPa
0300	38.8	2.4	11.1	33.2	29.1	1.8	6.3	18.8
0350	45.0	2.8	14.9	44.6	33.8	2.1	8.4	25.2
0400	51.4	3.2	19.4	58.1	38.5	2.4	10.9	32.7
0500	64.3	4.1	21.7	64.9	48.2	3.0	12.2	36.4
0650	83.5	5.3	21.6	64.6	62.6	4.0	12.2	36.3
0800	102.5	6.5	23.8	71.1	76.9	4.9	13.4	39.9
1000	127.9	8.1	28.7	85.9	95.9	6.1	16.2	48.3
1251	164.1	10.4	44.2	132.2	123.0	7.8	24.9	74.4
1501	196.1	12.4	63.2	189.0	147.1	9.3	35.5	106.2
1751	230.4	14.5	31.7	94.9	172.8	10.9	17.8	53.3
2001	262.4	16.6	41.2	123.1	196.8	12.4	23.1	69.2
2501	320.8	20.2	38.3	114.5	240.6	15.2	21.5	64.2
3001	385.0	24.3	55.2	165.0	288.7	18.2	31.0	92.6
Model	30 Deg f (Delta t)				40 Deg f (Delta t)			
	(gpm)		Drop (ft)		(gpm)		Drop (ft)	
	GPM	L/s	Ft	kPa	GPM	L/s	Ft	kPa
0300	19.4	1.2	2.9	8.6	14.6	0.9	1.7	5.0
0350	22.5	1.4	3.8	11.4	16.9	1.1	2.2	6.6
0400	25.7	1.6	4.9	14.7	19.3	1.2	2.8	8.4
0500	32.1	2.0	5.4	16.2	24.1	1.5	3.1	9.1
0650	41.7	2.6	5.4	16.2	31.3	2.0	3.1	9.2
0800	51.3	3.2	5.9	17.8	38.5	2.4	3.4	10.1
1000	64.0	4.0	7.2	21.5	48.0	3.0	4.1	12.2
1251	82.0	5.2	11.1	33.1	61.5	3.9	6.2	18.7
1501	98.0	6.2	15.8	47.2	73.5	4.6	8.9	26.6
1751	115.2	7.3	7.9	23.7	86.4	5.5	4.5	13.4
2001	131.2	8.3	10.3	30.7	98.4	6.2	5.8	17.3
2501	160.4	10.1	9.5	28.5	120.3	7.6	5.4	16.0
3001	192.5	12.1	13.7	41.0	144.4	9.1	7.7	23.1

Verify system pipe sizing allows for flow velocity requirements.

HEATING SYSTEM PIPING

General Piping Requirements

All heating system piping must be installed by a qualified technician in accordance with the latest revision of the ANSI/ASME Boiler and Pressure Vessel Code, Section IV.

Where required, the piping must comply with ANSI/ ASME CSD-1, Standard for Controls and Safety Devices for Automatically Fired Boilers.

All applicable local codes and ordinances must also be followed. A minimum clearance of 1in, 25 mm must be maintained between heating system pipes and all combustible construction. All heating system piping must be supported by suitable hangers, not the boiler. The thermal expansion of the system must be considered when supporting the system. A minimum system pressure of **20 psig**, *138 kPa* must be maintained at boiler operating conditions. For glycol systems, a minimum system pressure of **30 psig**, *207 kPa* must be maintained at boiler operating conditions.

Notice: When equipped with a boiler pressure transducer, pressure will be monitored closely for increased protection. A warning and/or alarm will be detected when conditions fall below the following parameters:

Warning (boiler water) - pressure < 18 psi
Warning (boiler water/glycol mix) - pressure < 28 psi
Alarm - pressure < 15 psi

Boiler/Water Heater Piping Connections

The supply and return connections should be sized to suit the system, see Table 12.

Table 12- Supply & Return Pipe Connection

Model Size	Supply Size	Return Size
0300	2" NPT	2" NPT
0350	2" NPT	2" NPT
0400	2" NPT	2" NPT
0500	2" NPT	2" NPT
0650	2" NPT	2" NPT
0800	2" NPT	2" NPT
1000	2 1/2" NPT	2 1/2" NPT
1251	2 1/2" NPT	2 1/2" NPT
1501	2 1/2" NPT	2 1/2" NPT
1751	2-1/2" ANSI Flange	2-1/2" ANSI Flange
2001	2-1/2" ANSI Flange	2-1/2" ANSI Flange
2501	3" ANSI Flange	3" ANSI Flange
3001	3" ANSI Flange	3" ANSI Flange

CAUTION **System Cleaning & Flushing:** Prior to commissioning the boiler(s), the piping/ system must be cleaned and flushed to prevent contaminants from settling back into the boiler and fouling the heat exchanger. Isolate the boiler from the system prior to the cleaning process. Fill the system with water, add the cleaning solution and follow the solution manufacturer's instructions. Once clean, refill the system with clean water as specified in the Water Treatment section.

Water Treatment

This boiler was designed to operate in a closed loop heating system. System fill water must not contain more than 500 ppm of total dissolved solids, less than 150 ppm chloride concentration and no greater than 200 ppm hardness. Suspended solids such as Magnetite, Iron Oxides must be flushed from the system prior to commissioning the boiler(s). The PH level must be within the 6.5-8.5 range. Where required, the system must be protected by the addition of a corrosion inhibitor per the chemical supplier's instructions.

For systems requiring glycol for freeze protection use a glycol/water mix that prevents foaming. Air entrapped within foam significantly decreases heat transfer and can result in damage to the heat exchanger. Products such as DOWFROST, DOWTHERM, UCARTHERM or an equivalent product must be used to ensure proper protection to the boiler.

The water used for dilution of concentrated heat transfer fluids must be distilled, de-ionized, or equivalently clea as stated above. De-ionized water by itself can be aggressive towards many metals, but is perfectly safe when used for dilution of DOWFROST, DOWTHERM or UCARTHERM as specified by the manufacture.

FAILURE TO ENSURE PROPER WATER QUALITY CAN RESULT IN DAMAGE TO THE BOILER(S) VOIDING THE WARRANTY.

Water Meter

Make-up water introduced into a closed system due to system leaks can negatively affect the long term reliability of the heating system resulting in abnormal boiler water quality. It is recommended that a water meter be installed in the system make-up line. If make-up is recorded, the leaks must be found and repaired.

Pump Requirements

This boiler requires a continuous minimum water flow for proper operation. The system pump must be sized to overcome the head loss of the boiler and the heating system in order to achieve the required temperature rise. Table 11 provides the heat exchanger pressure drop and temperature rise figures. If the system contains hydronic antifreeze this must be considered when sizing the pump. The temperature rise across the boiler must never exceed **60°F**, *15.5°C.*

Low Water Cutoff
Each boiler comes equipped with a factory installed low water cutoff.

Expansion Tank & Air Separator
An expansion tank or other means to control thermal expansion must be installed in the heating system. It is recommended the expansion tank is installed close to the suction side of the pump. Coalescing style air separators are required in Variable Speed Systems where velocities can vary and maybe too slow for conventional type air separators. Failure to follow these guidelines will result in poor system performance with minimal air removal and may void the factory warranty.

Reverse Return Piping
Consideration of system thermal mass, minimum system load & system flow must be based on the relationship between the boiler minimum output and the system's ability to absorb the energy. Insure at least a ten (10) minute boiler run cycle at minimum system load. Systems using multiple boilers can also be installed using a reverse return system, Figure 15.

Primary/Secondary Piping (RECOMMENDED)
Figure 16 shows a typical single and multiple boiler primary/secondary piping system. A dedicated pump is used to maintain a constant water flow through the boiler. Flow must be properly accounted for in the design of primary/secondary systems. In order to prevent boiler(s) from short cycling, the system flow must be equal to or higher than the boiler(s) local flow, (Figure 16). A hydraulic separator is designed to decouple the boiler flow from the system flow, (Figure 17). In cases when minimum boiler output exceeds system demand additional water volume may be required to maximize runtime. This can be accomplished with additional volume in form of a buffer tank or utilizing a hybrid buffer tank/ hydraulic separator combination or a three-way valve at the end of a main piping loop to provide system water volume to allow a minimum of 10 minutes run time at minimum load conditions.

NOTICE When required, use the following equation to determine the Buffer Tank capacity at the desired run time (10 min runtime recommended).

Buffer Tank Volume = (Desired Runtime x (Minimum Boiler Output - Minimum System Load))/(Temperature Differential x 8.33 x 60)

Where:
Buffer Tank Volume, (gal)
Desired Runtime, (min)
Minimum Boiler Output, (BTU/HR)
Minimum System Load, (BTU/HR)
Temperature Differential = (system supply - system return) 8.33 = weight of water, (lb/gal) 60 = (min/hr)

Piping For Use with Cooling Units
The boiler, when used in connection with a refrigeration system, must be installed so the chilled medium is piped in parallel with the boiler. Appropriate valves must be used to prevent the chilled water from entering the boiler.

When a boiler is connected to a heating coil that may be exposed to refrigerated air from an air handling device, the piping system must be equipped with flow-control valves or some other automatic means of preventing gravity circulation of the boiler water during the cooling cycle.

NOTICE It is essential that following boiler shut off, the boiler pump continue to operate for approximately (5) minutes to dissipate the heat away from the heat exchanger.

Figure 14 - Typical Single Boiler Piping
(Circulator pump ***must*** be sized for minimum water flow rate of boiler, including system pressure drop)

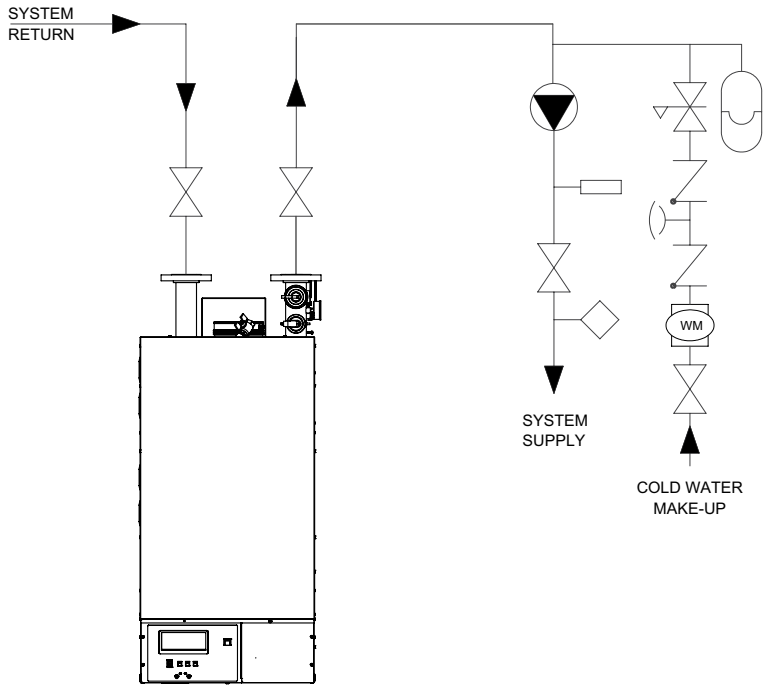

Figure 15 - Typical Multiple Boiler Reverse Return Piping
(Careful consideration as to minimum boiler and system water flow rates must be taken. Please consult our manufactures representative for assistance.)

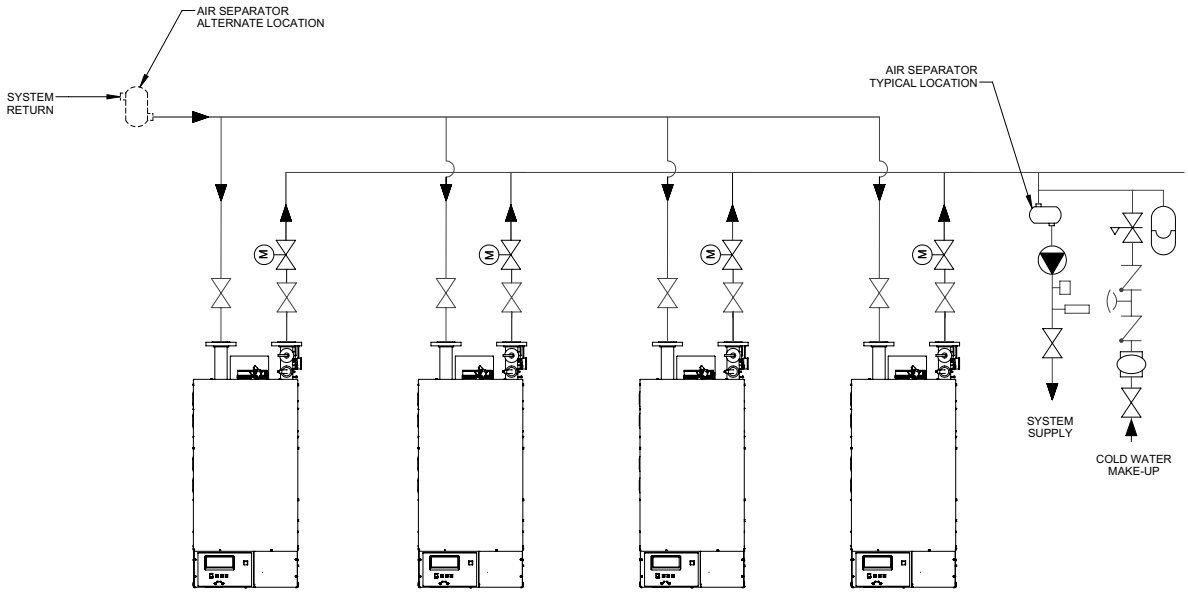

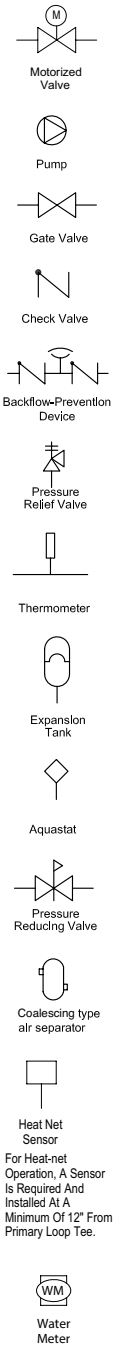

NOTE: Not all system valves may be shown. Consult local codes for additional system components which may be necessary. For HeatNet operation, a sensor is required and installed at a minimum of 12" from primary loop tee.

Figure 16 - Typical Single & Multiple Boiler Primary/Secondary Piping

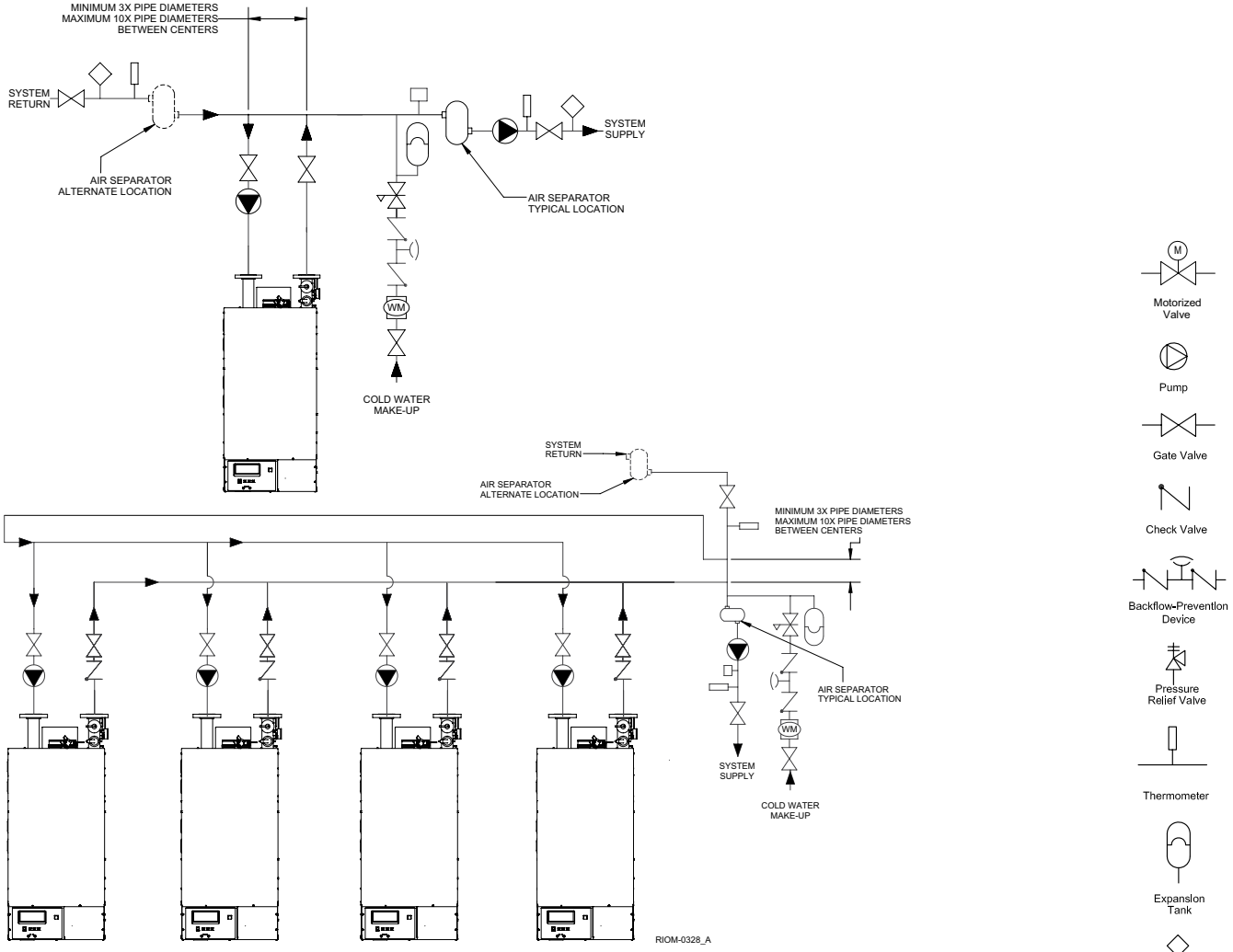

Figure 17 - Typical Multiple Boiler Primary/Secondary Piping - Hydraulic Separator (RECOMMENDED)

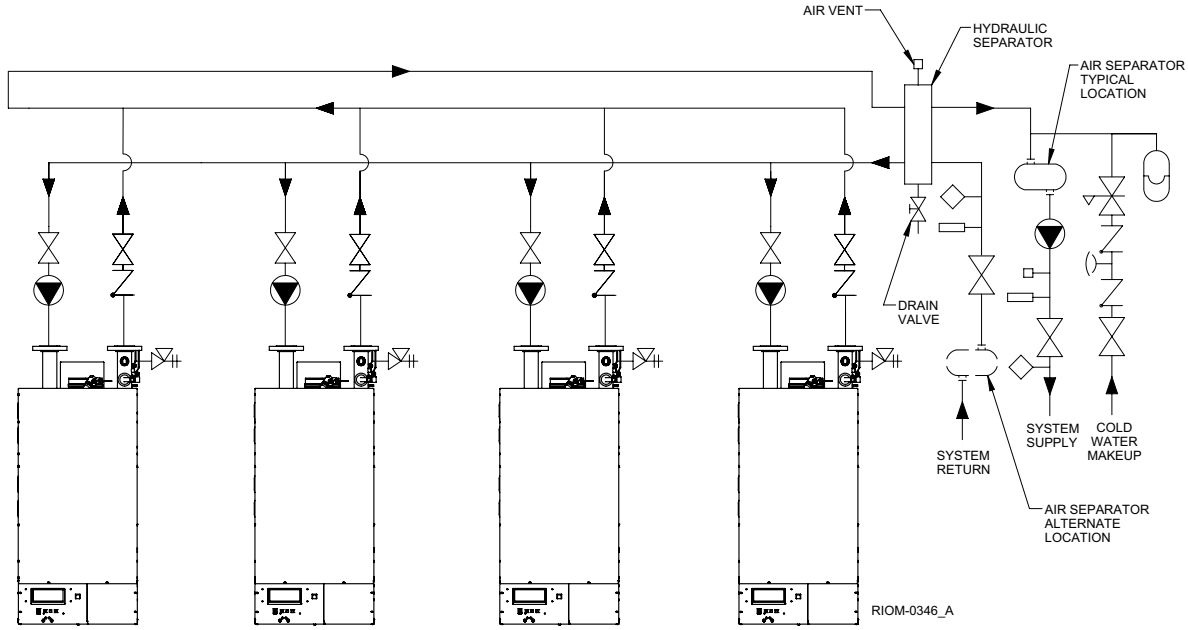

NOTE: Not all system valves may be shown. Consult local codes for additional system components which may be necessary. For HeatNet operation, a sensor is required and installed at a minimum of 12" from primary loop tee. For optimum results, the hydraulic separator must be sized per the manufacturers entering velocity requirements.

DOMESTIC WATER SUPPLY PIPING

⚠CAUTION Proper controls must be used to prevent water supplied for domestic use from exceeding **130°F**, *54°C* or a scald injury will occur! When higher water temperatures are required for appliances such as a dishwasher, a mixing valve or some other tempering means must be installed. Households with small children may require water temperatures less than **120°F**, *49°C*. Local codes must be complied with!

General Piping Requirements

The Piping and components connected to the water heater must be suitable for use with potable water. The water heater must not be connected to any heating system piping or components previously used with a non-potable water heating appliance. No toxic chemicals, such as those used for boiler treatment, are to be introduced into the potable water used for space heating.

Potable Water Heating

If a hot water storage tank is used in the system it must be equipped with a temperature and pressure relief valve that complies with ANSI Z21.22 or CAN-4.4 and CAN-4.6. The storage tank must be located as close to the boiler/ water heater as possible to prevent excessive head loss which will reduce flow. Two typical water heating systems are shown in Figures 18 & 19.

Thermostatic Mixing Valve- Water Above 140°F, *60°C*

Water can be stored a temperatures above **140°F**, *60°C* provided that a thermostatically controlled mixing valve is used to temper the hot water to an acceptable temperature before it's supplied for domestic use. The mixing valve ***MUST*** be set to prevent a scald injury from occurring, see the caution against scalding above. Storage of water for domestic use above **140°F**, *60°C* will provide an increased quantity of tempered water and help prevent the growth of water born bacteria.

Potable Water & Space Heating

⚠WARNING The following must comply when this water heater is used for both potable water and space heating applications.

1. Follow the "General Piping Requirements" Section of this page.
2. The water heater must not be used in space heating applications only.
3. When the system requires water for space heating at temperatures greater than 140°F, 60°C a means such as a mixing valve shall be installed to temper the water in order to reduce scalding.

Water Chemistry

The required temperature rise across the primary heat exchanger is based on water having a hardness between 4 and 12 grains per gallon with a level of dissolved solids not exceeding 350 ppm. Water having a hardness less than 4 grains can cause excessive corrosion of the heat exchanger. Water that has a hardness greater than 12 grains per gallon and/or a level of dissolved solids exceeding 350 ppm will require a larger circulating pump and temperature rise. Water hardness greater than 15 grains per gallon will require a water softner system.

RBI water heaters are designed to run scale free. Due to the extreme variables of water conditions world wide it is necessary to consider pH values and water hardness in relationship to scaling. It is crucial to consider these two variables when making pump selections. Scale free operation can be achieved when properly following the guidelines in (Table 12a). In some areas of the country additional precautions must be observed due to unusual characteristics of the local water supply. Call the nearest RBI representative for details.

Table 12a

Water Heater Min Flow Rates							SIKA Flow Switch Paddle Trim Mark Location
pH Level	6.5-8.5						
Water Hardness	Normal (4.7 to 12) gpg			Hard (12-15) gpg			
Model	GPM	Delta-t	Drop (ft)	GPM	Delta-t	Drop (ft)	
0300	30.7	19.0	7.0	40.9	14.2	12.3	15
0350	30.7	22.1	7.0	40.9	16.6	12.3	15
0400	30.7	25.2	7.0	40.9	18.9	12.3	15
0500	36.8	26.4	7.1	49.1	20.0	12.6	15
0650	49.1	25.7	7.5	65.5	19.3	13.3	15
0800	61.4	25.3	8.5	81.9	19.0	15.1	15
1000	73.7	26.3	9.5	98.2	19.7	16.9	15
1251	100.0	24.8	16.4	120.0	20.7	23.7	15
1501	100.0	29.8	16.4	120.0	24.8	23.7	15
1751	153.5	22.1	14.1	204.6	16.6	25.0	15
2001	153.5	25.3	14.1	204.6	19.0	25.0	15
2501	233.3	21.2	20.2	319.2	15.5	37.9	15
3001	233.3	25.2	20.2	319.2	18.4	37.9	15

Expansion Tank

An expansion tank or other means to control thermal expansion must be installed in the water heating system if back flow prevention devices are installed.

Pump Requirements

This low-mass water heater requires a continuous minimum water flow for proper operation. When making pump selections, proper velocity through the water heater must be maintained for efficient operation and long life. If the temperature rise is too high, the flow rate is too low. Scaling and softening of the primary heat exchanger will occur. **The temperature rise across the primary heat exchanger must never exceed *the flow rates listed in Table 12a.***

Figure 18 - Typical Single Boiler with Direct Storage Tank Piping

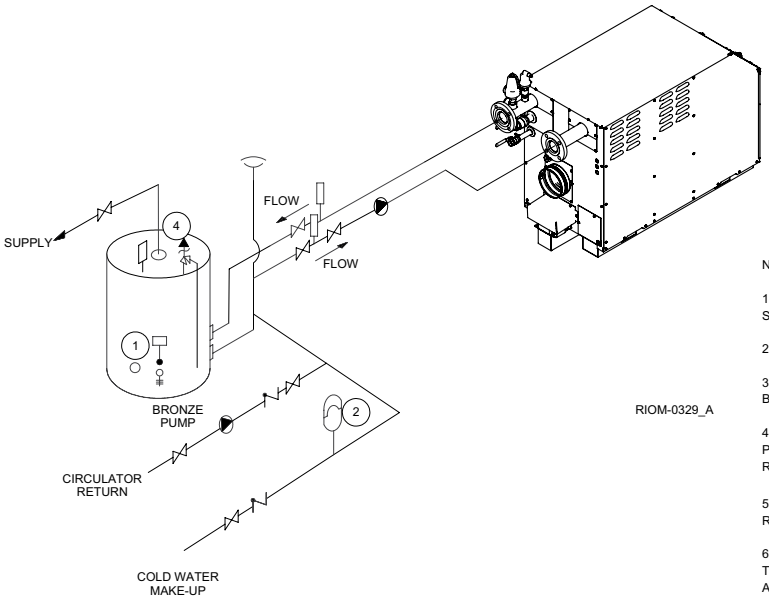

NOTES:

1. LOCATE HEATNET SENSOR WITH WELL IN LOWER 1/3 OF TANK. INSTALL SENSOR WITH HEAT SENSING COMPOUND.

2. THERMAL EXPANSION TANK MAY BE REQUIRED, CHECK LOCAL CODES.

3. CAUTION: MEASURE WATER HARDNESS AND PH AT JOB SITE. THIS MUST BE MEASURED BEFORE SELECTING PUMP.

4. HOT WATER TANKS SHOULD BE EQUIPPED WITH A COMBINATION TEMPERATURE & PRESSURE RELIEF VALVE. VALVE SHALL DISCHARGE TO A SAFE PLACE WITH AN AIR GAP. REFER TO LOCAL CODES.

5. CONTRACTOR SHALL VERIFY, WITH AUTHORITY HAVING JURISDICTION, FOR THE REQUIREMENTS OF AN ACID NEUTRALIZATION KIT.

6. A THERMOSTATIC MIXING VALVE MAY BE REQUIRED AT THE OUTLET OF THE TANK IN ORDER TO LIMIT THE MIXED WATER TO A DESIRABLE TEMPERATURE HELPING TO PREVENT SCALDING AND INJURY. CONSULT LOCAL CODES.

NOTICE: THESE DRAWINGS SHOW SUGGESTED PIPING CONFIGURATION, VALVING AND ARE DIAGRAMMATIC. CHECK WITH LOCAL CODES AND ORDINANCES FOR SPECIFIC REQUIREMENTS.

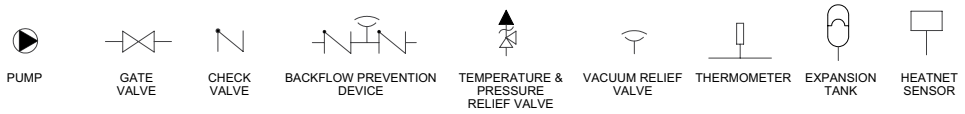

Figure 19 - Typical Multiple Boiler with Direct Storage Tank Piping

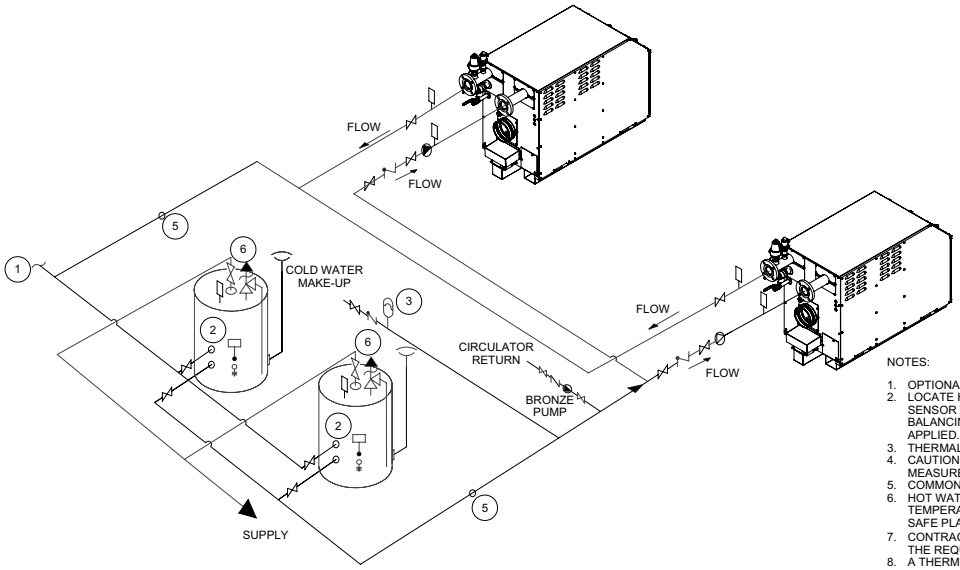

NOTES:

1. OPTIONAL COLD WATER MAKE UP AND RECIRCULATION LINE LOCATION.
2. LOCATE HEATNET SENSOR WITH WELL IN LOWER 1/3 OF TANK. INSTALL SENSOR WITH HEAT SENSING COMPOUND. FOR MULTIPLE TANKS, SELF-BALANCING REVERSE-RETURN SYSTEMS, A SINGLE HEATNET SENSOR IS APPLIED.
3. THERMAL EXPANSION TANK MAY BE REQUIRED, CHECK LOCAL CODES.
4. CAUTION: TEST WATER HARDNESS AND PH AT JOB SITE. THIS MUST BE MEASURED BEFORE SELECTING PUMP.
5. COMMON PIPING MUST BE SIZED FOR MAXIMUM COMBINED HEATER FLOW.
6. HOT WATER TANKS SHOULD BE EQUIPPED WITH A COMBINATION TEMPERATURE & PRESSURE RELIEF VALVE. VALVE SHALL DISCHARGE TO A SAFE PLACE WITH AN AIR GAP. REFER TO LOCAL CODES.
7. CONTRACTOR SHALL VERIFY, WITH AUTHORITY HAVING JURISDICTION, FOR THE REQUIREMENTS OF AN ACID NEUTRALIZATION KIT.
8. A THERMOSTATIC MIXING VALVE MAY BE REQUIRED AT THE OUTLET OF THE TANK IN ORDER TO LIMIT THE MIXED WATER TO A DESIRABLE TEMPERATURE HELPING TO PREVENT SCALDING AND INJURY. CONSULT LOCAL CODES.

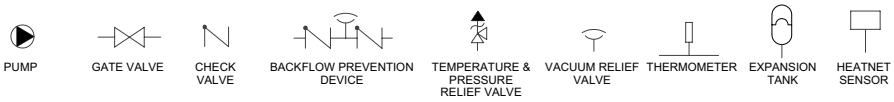

CONDENSATE PIPING

The condensate trap provided with the boiler/water heater must be attached to the bottom pan and piped to a suitable floor drain (consult local code) or condensate pump. If a condensate neutralization device is required by local code, it must be positioned prior to boiler room drain. Fill the condensate trap with water, check and maintain water level in trap during operation prior to start-up.

GAS SUPPLY PIPING

⚠WARNING Check the boiler/water heater rating plate to make sure that the boiler/water heater is for the type of gas that will be used. If it isn't, do not connect the boiler to the gas supply. Failure to comply with this warning can result in extensive property damage, severe personal injury or death!

The Torus comes from the factory ready to be piped to the gas supply. If for any reason the boiler/water heater is not for the type of gas available at the installation site, call your RBI representative to resolve the problem.

Do not size the gas supply line nominal iron pipe size based only on the boiler gas inlet connection size. The gas supply line (feed) to the boiler gas inlet connection must be designed per an engineered method and utilizing (Table 13) to ensure that the gas supply piping is sized properly. Do not neglect the pressure drop due to pipe fittings. (Table 13) should be used in conjunction with (Table 14) to ensure that the gas supply piping has the capacity to meet the demand. If more than one appliance is supplied by the same supply pipe, the piping must be sized based on the maximum possible demand.

Figure 21 depicts the proper way to connect the boiler to the gas supply piping. The manual shut-off valve MUST be installed in the supply piping. It should be installed **5 ft**, *1 m* above the floor where required by local codes. Provide a sediment trap at the bottom of the vertical section of the gas supply pipe upstream of the gas controls.

Table 13 - Gas Pipe Capacity

Maximum pipe capacity in ft³/hr based on 0.60 specific gravity gas at a pressure of 0.5 psig or less and a 0.3" WC pressure drop.									
Nominal Iron Pipe Size	Pipe length in feet								
	10	20	30	40	50	60	80	100	150
	Maximum gas volume of pipe (ft³/hr)								
1"	520	350	285	245	215	195	170	150	120
1 1/4"	1050	730	590	500	440	400	350	305	250
1 1/2"	1600	1100	890	760	670	610	530	460	380
2"	3050	2100	1650	1450	1270	1150	990	870	710
2 1/2"	4800	3300	2700	2300	2000	1850	1600	1400	1130
3"	8500	5900	4700	4100	3600	3250	2800	2500	2000
4"	17,500	12,000	9700	8300	7400	6800	5800	5100	4100
5"	31,700	21,800	17,500	15,000	31,300	12,000	10,300	9110	7320
6"	51,300	35,300	28,300	28,300	21,500	19,500	16,700	14,800	11,900

Note: Multiply the gas volume by 0.62 for propane flow capacity in ft³/hr. Multiply the propane flow capacity by 2500 Btu/ft3 to determine the propane Btu/hr capacity for a given pipe size and length.

Table 14 - Equivalent Pipe Length Chart

Nominal Iron Pipe Size	Type of pipe fitting			
	90° Elbow	Tee[1]	Gas Valve[2]	Gas Cock[2]
	Equivalent pipe length, (ft)			
1"	2.6	5.2	0.6	1.5
1 1/4"	3.5	6.9	0.8	1.9
1 1/2"	4.0	8.0	0.9	2.3
2"	5.2	10.3	1.2	3.0
2 1/2"	6.2	12.3	1.4	3.5
3"	7.7	15.3	1.8	4.5
4"	10.1	20.2	2.4	6.0
5"	12.6	25.2	2.9	7.3
6"	15.2	30.4	3.5	13.4

Notes: 1. For flow through branch.
2. For flow at full open.

Figure 20 - Torus Series Condensate Drain

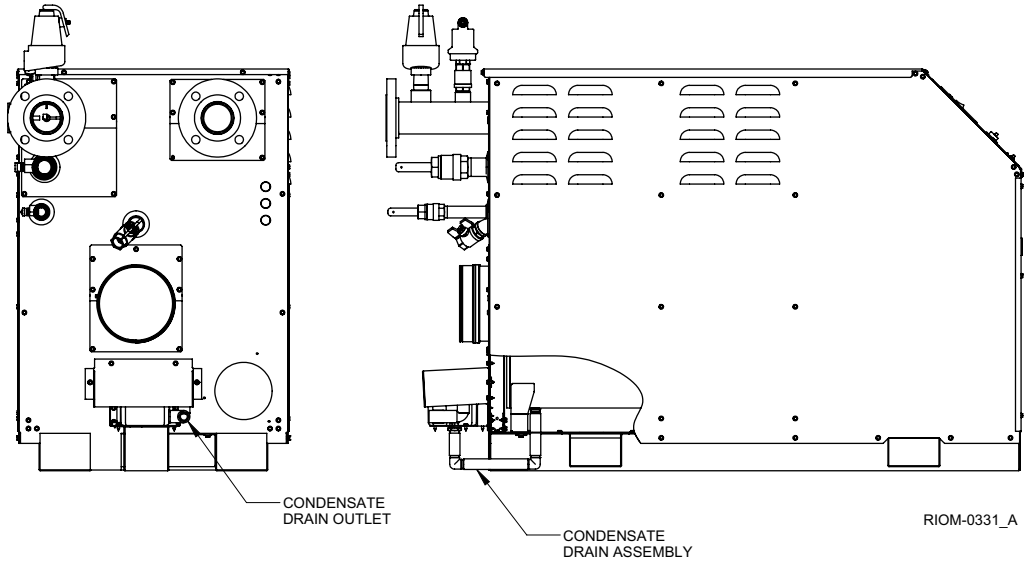

A ground joint union should be installed between the boiler/ water heater gas controls and the supply piping. Each of these items are needed to ensure long life and ease of servicing. Always use a pipe sealant that is suitable for use with with the type of gas (NG/LP) being used.

NOTICE A lockup style regulator, supplied by others, must be installed, see Figure 21, if gas pressure exceeds (14 in WC). The regulator, when installed as shown, must follow the manufacturers gas pressure regulator I&O manual for proper sizing and installation. All boilers are calibrated and factory test fired at (7 in ± 1.0) WC.

NOTICE A minimum of (4 in WC) and maximum of (14 in WC) must be maintained to the inlet of the boiler/water heater gas train not to exceed a maximum of (1 in WC) drop when firing from minimum input to full load of the gas supply line and all the appliances running.

⚠CAUTION Always use a wrench on the gas valve body when making gas connections to it. Never over-tighten the piping entering the gas valve body or gas valve failure may result!

⚠CAUTION Gas train must be isolated when purging the gas line prior to commissioning the boiler.

NOTICE Corruption of the gas train components with debris and cutting oils can reduce reliable operation which can have a negative effect on the operation & manufacturers warranty of the Dungs gas valve. The factory supplied Dungs MBC modulation gas valve, see Figure 21, incorporates an internal filter that must be inspected and changed at required intervals. Reference the Dungs MBC Installation Instructions - 264541 for detailed instructions. Combined with clean gas pipes and good plumbing practices (such as installing a drip leg), should adequately protect the MBC valve seat, regulator and internal orifices from clogging or damage. However, site conditions might warrant an additional filter. It is recommended that a Dungs FM-FGM In-line Gas Filter or an equivalent be installed upstream of the appliance gas regulator to the unit.

⚠WARNING Never use an open flame to test for gas leaks. Always use an approved leak detection method. Failure to comply with this warning can cause extensive property damage, severe personal injury or death!

Whenever the gas supply piping is pressure tested the boiler gas controls must be protected. If the test pressure is equal to, or less than 1/2 psig, 3.5 kPa isolate the boiler by closing its' manual shut off valve, see Figure 21. If the test pressure is greater than, or equal to 1/2 psig, 3.5 kPa, disconnect the boiler and its individual shut-off valve.

Safe lighting and other performance criteria were met with the gas manifold and control assembly provided on the boiler/water heater. All gas connections MUST be leak tested before putting the boiler into operation.

ELECTRICAL WIRING

Electrical Power Connections

⚠CAUTION Label all wires prior to disconnection when servicing controls. Wiring errors can cause improper and dangerous operation! Verify proper operation after servicing.

The electrical connections to this boiler/water heater must be made in accordance with all applicable local codes and the latest revision of the National Electrical Code, ANSI /NFPA-70. Installation should also conform with CSA C22.1 Canadian Electrical Code Part I if installed in Canada. A separate circuit breaker must be installed per boiler - (if required, the optional local pump FLA must be incorporated and sized accordingly). A properly rated shut-off switch should be located at the boiler. The boiler must be grounded in accordance with the authority having jurisdiction, or if none, the latest revision of the National Electrical Code, ANSI/ NFPA-70.

Refer to the wiring diagram supplied with the boiler for proper wiring connections and boiler full load amperage (FLA).

Figure 21 - Gas Supply Piping

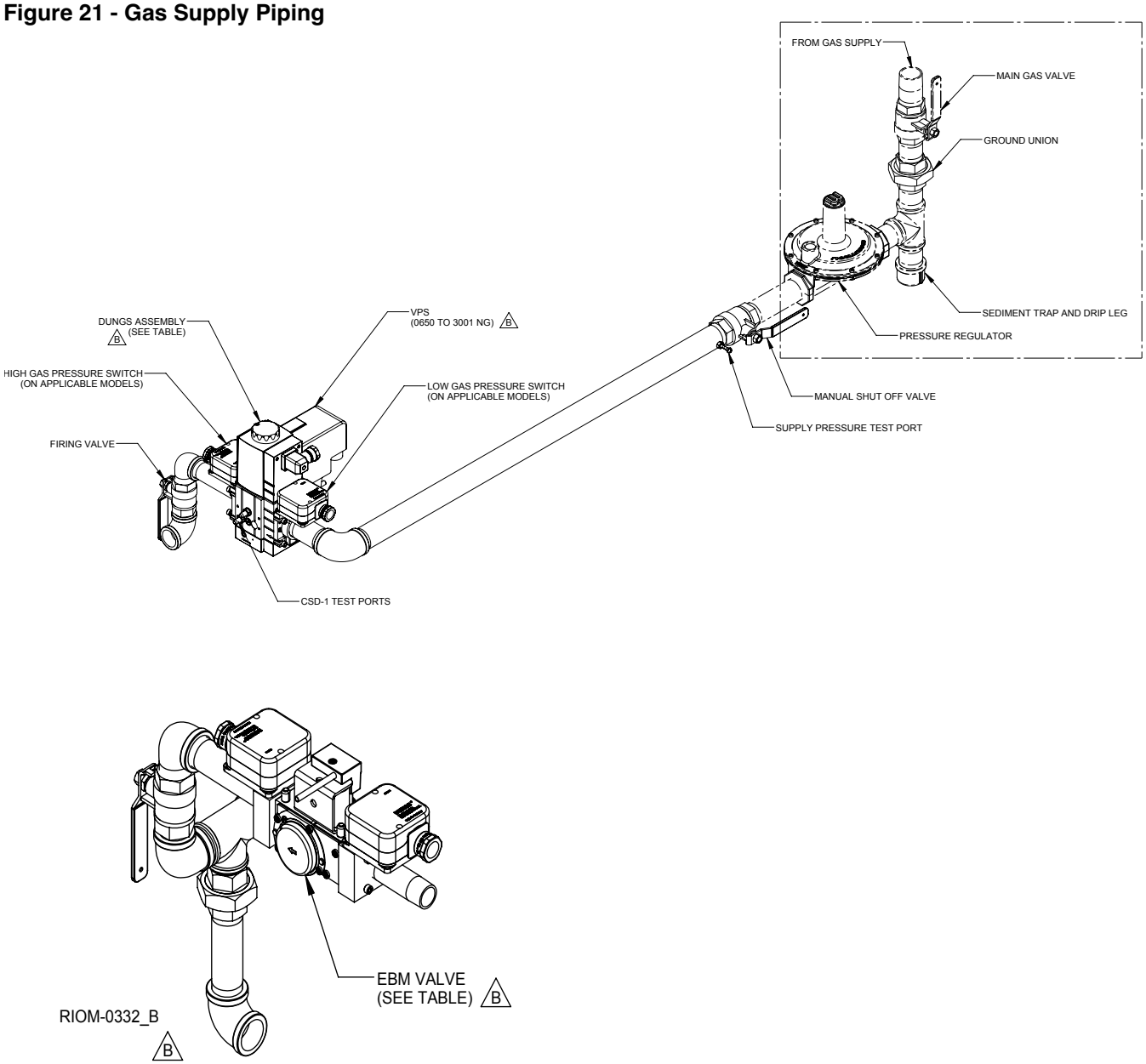

Model Range	NG Valve	LP Valve
0300 TO 0500	EBM	EBM
0650 TO 1501	Dungs MBC1000	EBM
1751 TO 3001	Dungs MBC2500	Dungs MBC1000

BOILER/WATER HEATER OPERATION

⚠WARNING Before proceeding read and fully understand the instructions contained in this manual. Do not attempt to operate this boiler if it has not been installed in accordance with the guidelines set forth in this manual. Failure to comply with this warning can result in extensive property damage, severe personal injury or death!

Should overheating occur or the gas supply fail to shut off, turn off the manual gas control valve to the appliance. **Do Not interrupt water flow through the boiler/water heater.**

Hydronic Heating Boilers (Fill System)
Open the make-up water valve and slowly fill the boiler and all of the radiation with water. Ensure that all bleed and drain valves are closed.

All applicable local codes and ordinances must also be followed. A minimum clearance of 1in, 25 mm must be maintained between heating system pipes and all combustible construction. All heating system piping must be supported by suitable hangers, not the boiler. The thermal expansion of the system must be considered when supporting the system. A minimum system pressure of **20 psig**, *138 kPa* must be maintained at boiler operating conditions. A minimum system pressure of **30 psig**, *207 kPa* fill pressure is required, at boiler operating conditions, on glycol mixtures within a closed loop.

Open the system bleed and drain valves, one at a time, to purge the air trapped in the heating system piping.

With the boiler off, run the system pump for at least 30 minutes and bleed the system piping using the bleed valves. If strainers are used in the system piping the make-up water valve should be closed and the strainers checked and cleaned.

The system expansion tank should be checked to ensure that tank air pressure equals cold static fill pressure.

Start the boiler as described in the OPERATING INSTRUCTIONS below. Run the boiler for at least an hour. The system pump(s) and all radiation units must be operated during this time. Ensure that the make-up water valve is open.

Shut the boiler off and open the bleed valves to purge the air trapped in the heating system piping. Close the make-up water valve and check and clean the strainers and make-up water pressure reducing valve.

Open the make-up water valve and adjust the system pressure if necessary.

The system should be checked and bled after three days of operation.

OPERATING INSTRUCTIONS

FOR YOUR SAFETY READ BEFORE OPERATING. ONLY QUALIFIED LICENSED SERVICE TECHNICIANS SHALL START, TROUBLESHOOT, AND SERVICE THIS APPLIANCE WITH APPROVED COMBUSTION ANALYZER.

A. This appliance is equipped with an ignition device which automatically lights the pilot. Do not try to light the pilot by hand.

B. BEFORE OPERATING smell all around the appliance area for gas. Be sure to smell next to the floor because some gas is heavier than air and will settle on the floor.

WHAT TO DO IF YOU SMELL GAS
- Do not try to light any appliance.
- Do not tough any electric switch; do not use any phone in your building.
- Immediately call your gas supplier from a phone outside of the building. Follow the gas suppliers instructions.
- If you cannot reach your gas supplier, call the fire department.

C. Do not use this appliance if any part has been under water. Immediately call a qualified service technician to inspect the appliance and to replace any part of the control system and any gas control that has been under water.

Operating Instructions

1. STOP! Read the safety information above. If, at any time, the appliance will not operate properly, follow the instructions "TO TURN OFF GAS TO APPLIANCE" and call your service technician or gas supplier.

2. Set the operating control to off and disable any outside (BMS) call for heat.

3. Turn off all electric power to the appliance.

4. Remove the front cover.

5. Close manual main shut-off valves 1 and 2, Figure 21.

6. Purge the gas piping up to the manual valve ahead of the main gas control of air. When the bleeding is complete, check all gas joints up to the gas valve for leaks.

7. Wait five (5) minutes to clear out any gas.

8. Install a fitting at the supply test port and connect a manometer having a minimum range of **20 in**, *508 mm* WC to it, Figure 21. Connect both sides of a manometer or pressure gauge to the manometer pressure taps (differential pressure barbed connections) located inside the upper control panel, Figure 22 & 27.

9. See the "Gas Supply Piping" section for the required static and run gas pressure.

10. Open the manual main shut-off valves 1 and 2, Figure 21. Follow the same procedure for multiple gas train configurations (Dual Fuel).

11. Place the "Remote/Local" switch to Remote.

12. Turn the power switch on the front of the boiler to "on". It will light up when the power is on. If all interlocks are properly closed, the display will say "Standby", Figure 22.

13. Verify the proper fuel type (Natural Gas or Propane) is selected before proceeding - (reference the Boiler Type Settings Dialog in the HeatNet Control Manual). Slide the HeatNet controls low fire switch (on the HeatNet control board) to the low fire position.

14. The boiler will begin the start sequence.

15. When the main display reads "MAIN IGNITION", the burner will light at the "Ignition (%)" shown on the display. In the event the boiler doesn't light the burner will recycle 3 times prior to an ignition lockout. For CSD-1 models, the burner will lockout after one failed ignition try. Non CSD-1 models will require a power cycle to reset the Fenwal control. CSD-1 models utilize a ignition lockout reset switch, Figure 22.

16. To adjust the IGNITION value as shown in the display, place the 'S2' Calibration switch located on the 3.0 HeatNet board to the 'CAL' position. A reload message will be displayed then the calibrate screen. Press the 'Adjust' button under the Ignition (%) setting. The percentage value will turn green and the boiler will ramp to the ignition setting. Set the blower speed - RPM, (Table 16), using the arrow keys, to provide the desired rate for ignition. When the adjustment is satisfactory, press the check key to save the setting.

NOTICE The Calibration (Min % & Max %) represents the mapped signal sent to the blower and doesn't reflect the (modulation %) as indicated on the HeatNet Screen.

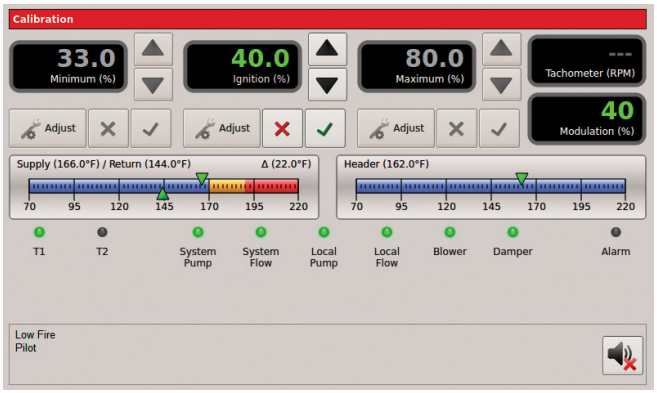

17. Adjusting the Min % and the Low Fire Combustion values: The boiler will cycle and achieve low fire status. Allow low fire to settle out for a few minutes and observe the combustion reading.

    a. Verify the 'S2' - Calibration switch located on the 3.0 HeatNet board is in the 'CAL' position.

Figure 22 - Control Panel Components

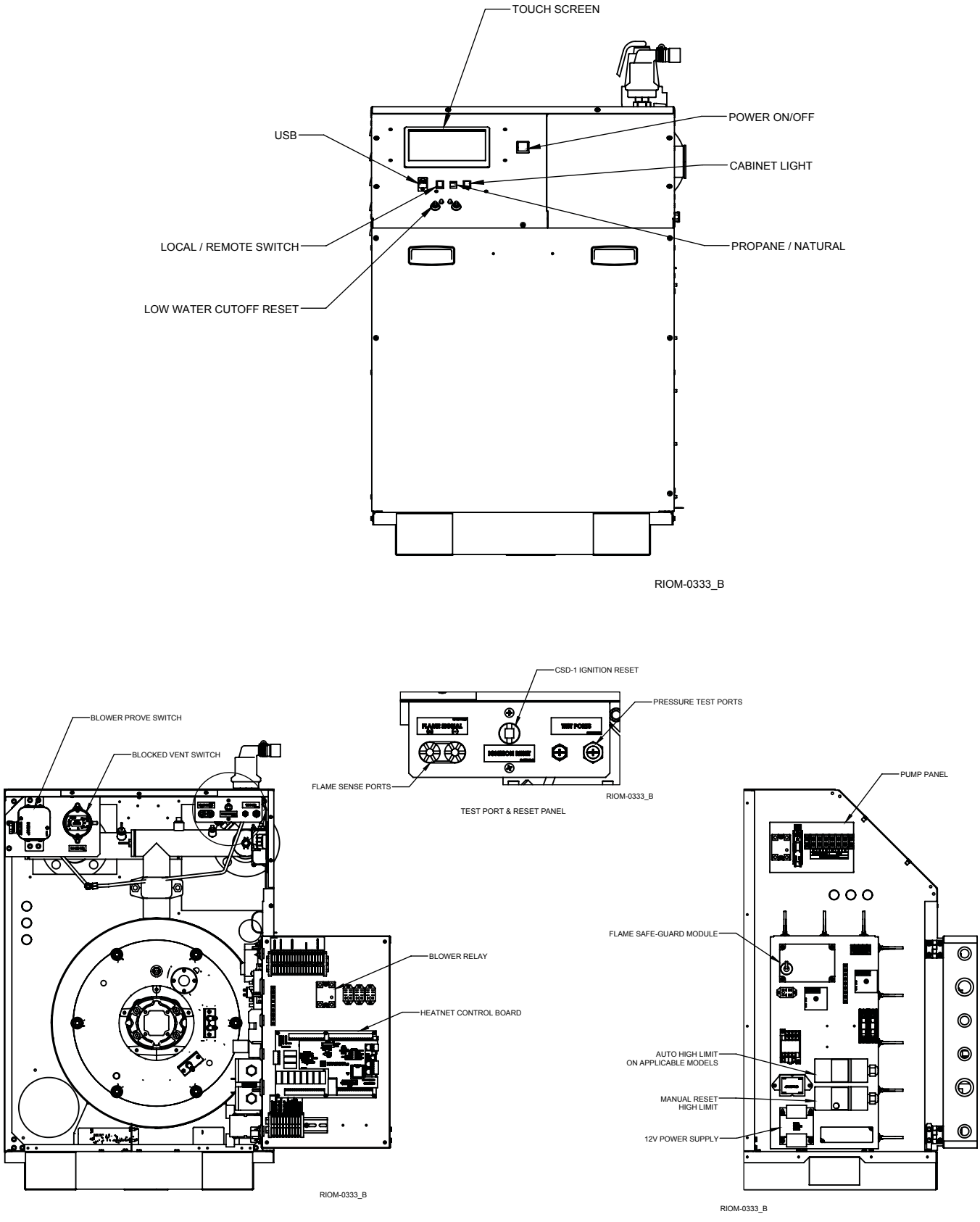

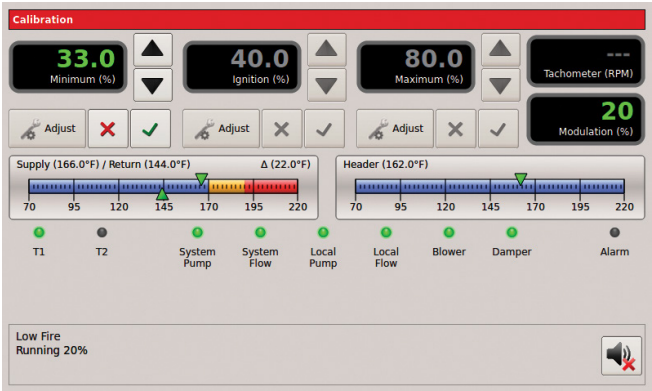

b. Press the 'Adjust' button under the Minimum (%) setting. The percentage value will turn green. Adjust the minimum value (%, using the arrow keys, to achieve the required combustion - C02/02, (Table15), and pressure - delta p/blower speed - RPM, (Table 16), at low fire based on the desired turn down.

c. DUNGS MBC Valve: Adjust low fire 02-C02 by opening the low fire adjustment door located on the forward facing side of the main gas valve, (Figure 21 & 25). Inserting an allen wrench and rotating the allen screw counter clock-wise will increase the C02 and lower the 02; rotating clock-wise will decrease the C02 and increase the 02.

d. EBM Valve: See Figure 25 for the location of the gas valve low fire adjustment. Use a 2 mm hex wrench. When adjusting the low fire setting, make changes in half turn increments. Allow the flame to stabilize before adjusting each time. If CO2 is too HIGH (O2 too low), reduce gas by turning the adjustment COUNTERCLOCKWISE (one half turn at a time).

e. When the adjustment is satisfactory, press the check key to save the setting.

18. Setting the Max % and High Fire Combustion values:

a. Verify the 'S2'- Calibration switch located on the 3.0 HeatNet board is in the 'CAL' position.

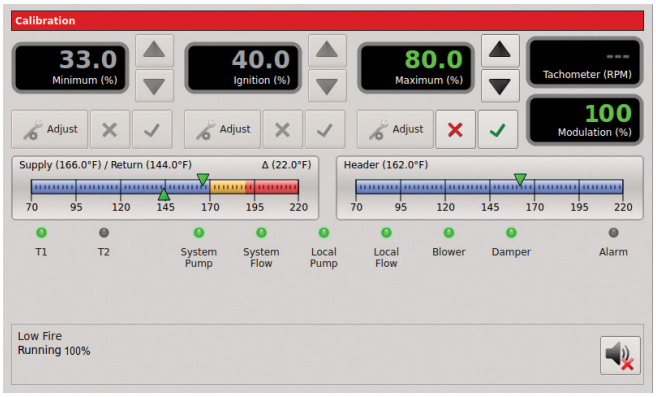

b. Using the low fire switch on the HeatNet board create a minimum input demand. The boiler will cycle to low fire position. Press the 'Adjust' button under the Maximum (%) setting.The percentage value will turn green indicating that it can be changed. Adjust the maximum value (%), using the arrow keys, to achieve the required combustion – CO2/O2 (Table 15), and pressure - delta p/blower speed - RPM, (Table 16).

c. DUNGS MBC Valve: The high fire trim adjustment is located on the outlet flange, (Figure 21), of the gas valve. Figure 25 provides further illustration of the gas valve high fire location. Rotating the adjustment screw clock-wise will increase the CO2 and lower the O2; rotating counter clock-wise will decrease the CO2 and increase the O2. Continue to step e.

d. EBM Valve: See Figure 25 for the location of the gas valve high fire adjustment. Adjust gas input with a throttle screw adjustment using a long shank common bit screwdriver. When adjusting the high fire setting, make changes in half turn increments. Allow the flame to stabilize before adjusting each time. If CO2 is too HIGH (O2 too low), reduce gas by turning the adjustment CLOCKWISE (one half turn at a time). Recheck the analyzer and flame after each half turn. If CO2 is too LOW (O2 too high), increase gas by turning the adjustment COUNTERCLOCKWISE (one half turn at a time). Recheck the analyzer and flame after each half turn.

e. When the adjustment is satisfactory press the check key to save the setting. When complete, place the 'S2' switch back to the 'NORM' position.

f. Allow the boiler to settle into min input and observe combustion and pressure-delta p readings to ensure the boiler is operating correctly. Make any required adjustments. When complete disable the low fire hold switch.

g. Follow the instructions in the HeatNet Control manual to allow adjustments required for high altitude installations.

SEQUENCE OF OPERATION

NO DEMAND
Standby

1. The boiler is idle with no interlocks in the fault condition.

DEMAND
Pre-Purge

1. The blower operates at purge RPM. The water flow interlock must 'make' within 15 seconds after the demand signal is initiated.

2. The HeatNet Control starts a 10 second purge delay once the air prove switch contacts close.

Main Run % Input

1. The main gas valve opens.

2. The ignition transformer is de-energized after 6 seconds of ignition.

3. The blower stays at the minimum input setting for 3 seconds then operates at demand % input. See the calibration section in the "Torus Series Control-IOM" to enter the calibration menus.

NO DEMAND
Post-Purge

1. The main gas valve closes.

2. The blower operates at purge RPM for 10 seconds.

3. The boiler is idle with no interlocks in the fault condition.

CHECKING, ADJUSTMENT & OPERATION

Spark Gap

The gap has to be measured and adjusted with the igniter removed from the boiler. Observe the trial for ignition to confirm that the spark is strong and continuous. If not, allow the electrodes to cool. Check and adjust the spark gap as shown in Figure 24. Electrode tips should face slightly downward.

Measure flame current

1. With the boiler operating at low fire, measure the flame current.
2. Attach microammeter leads to the Flame Sense Ports as shown in Figures 22 & 23.
3. The flame current should be approximately 6 microamps, and never less than 1 microamp.
4. If flame current is too low, check the ignition electrode/ flame rod assembly following the instructions in the Checking, Adjustment & Operation section of this manual.

Figure 23 - Test Port & Reset Panel

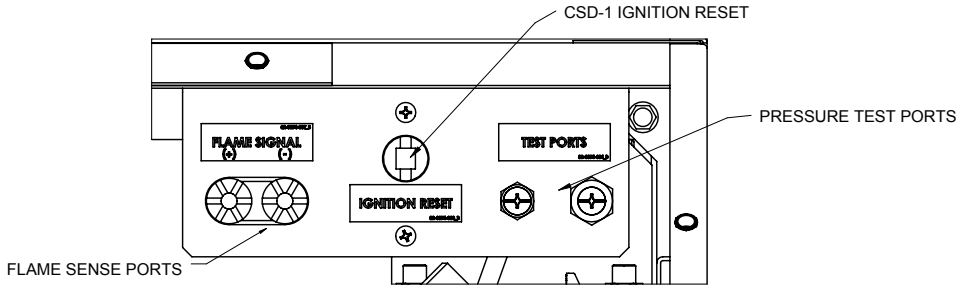

Figure 24 - Spark Gap (300-1501)

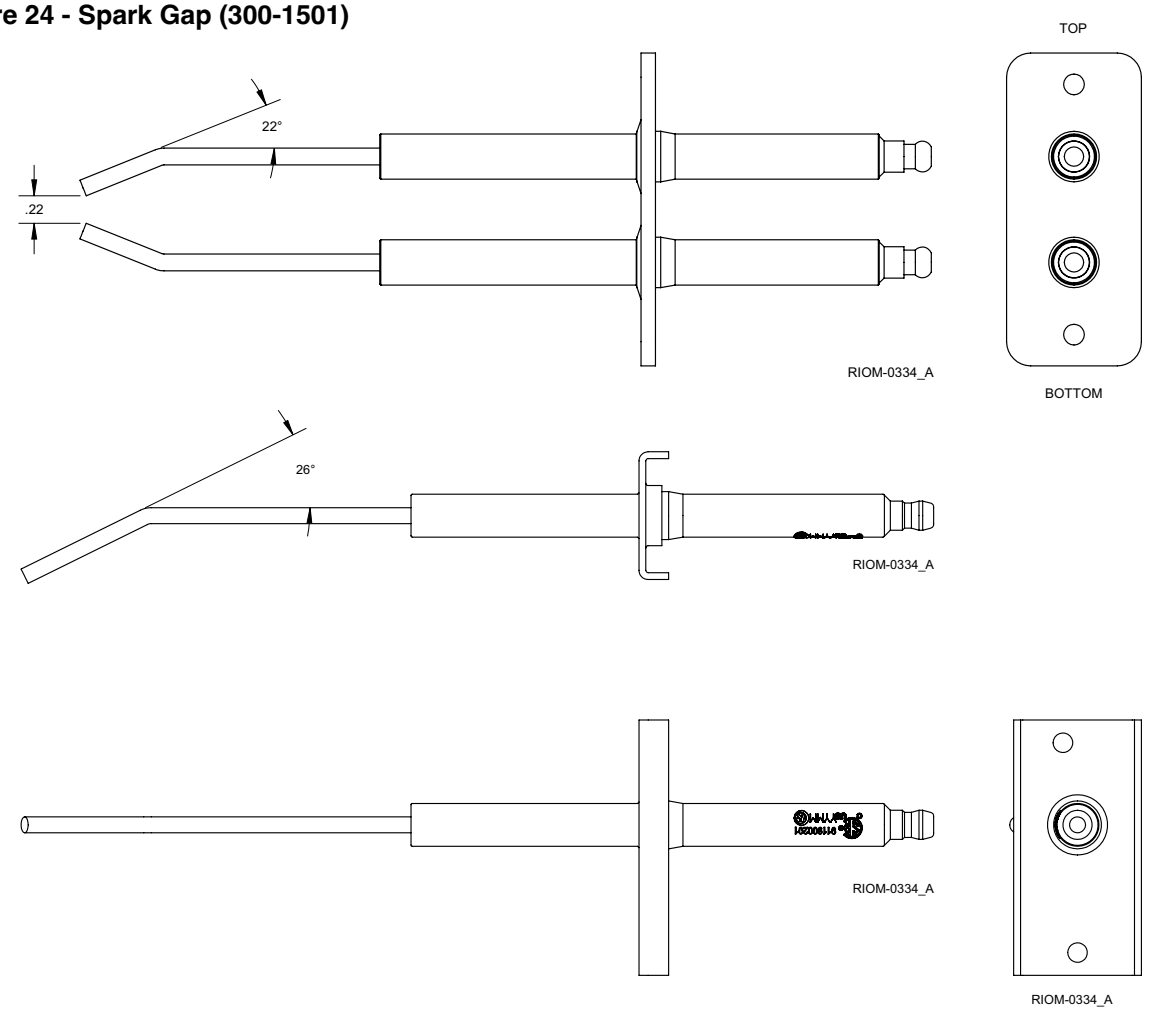

Spark Gap (1751-3001)

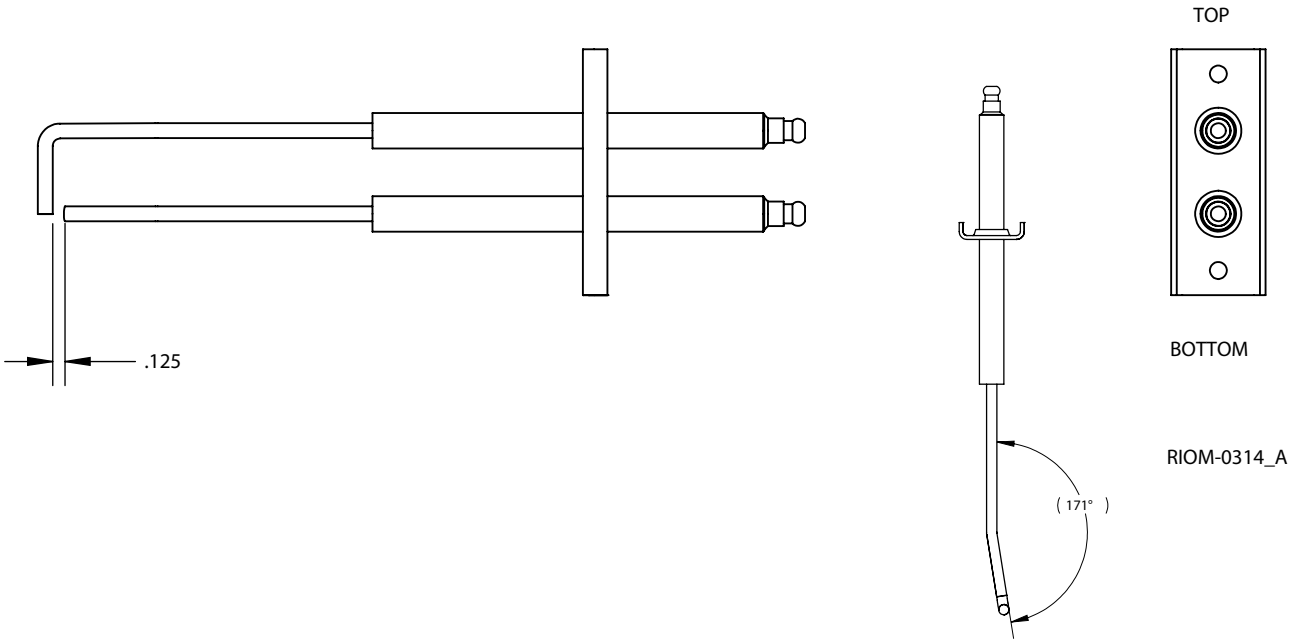

Figure 25 - Gas Adjustments

Models (0300-500) NG & (0300-1501) LP

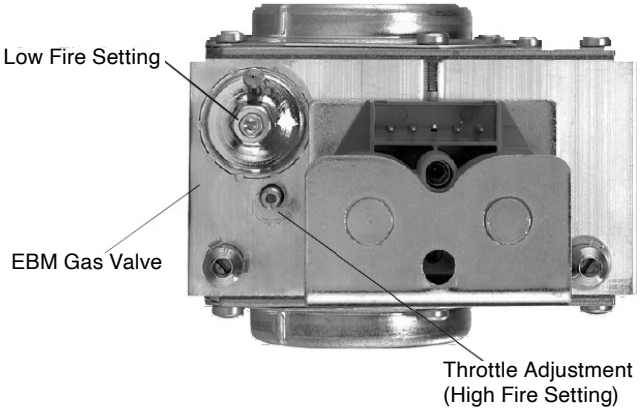

Models (0650-3001) NG & (1751-3001) LP

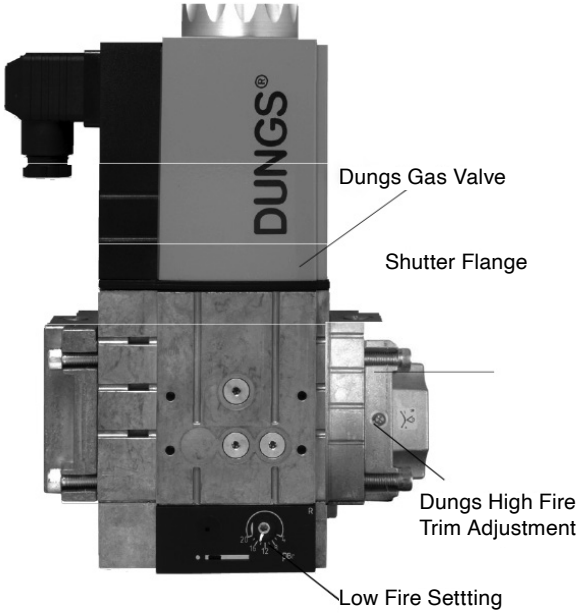

Table 15 - Combustion Settings

Inlet Air Temp.	Torus Series Whirlwind					
	CO_2 %				O_2 %	
	NG		LPG			
	Low Fire	High Fire	Low Fire	High Fire	Low Fire	High Fire
-40°F	7.2	8.0	8.4	9.4	8.3	6.9
-30°F	7.3	8.1	8.5	9.5	8.1	6.7
-20°F	7.4	8.2	8.7	9.6	7.9	6.5
-10°F	7.5	8.3	8.8	9.7	7.8	6.4
0°F	7.6	8.4	8.9	9.8	7.6	6.2
10°F	7.7	8.5	9.0	9.9	7.4	6.1
20°F	7.8	8.6	9.2	10.1	7.2	5.9
30°F	7.9	8.7	9.3	10.2	7.1	5.7
40°F	8.0	8.8	9.4	10.3	6.9	5.5
50°F	8.1	8.9	9.5	10.5	6.7	5.3
60°F	8.2	9.0	9.6	10.6	6.5	5.2
70°F	8.3	9.1	9.7	10.7	6.4	5.0
80°F	8.4	9.2	9.8	10.8	6.2	4.8
90°F	8.5	9.3	9.9	10.9	6.1	4.7
100°F	8.6	9.4	10.1	11.0	5.9	4.5

Due to job conditions, deviation from specified may be required – allow ± (0.2)% range adjustment.

Note: When units are installed with direct sealed combustion air, during periods of time with low outdoor temperature, it is possible for the room air to condense and possibly form frost on the air handling components of the boiler. Refer to: (2015 ASHRAE Cold-Climate Buildings Design Guide).

Table 16 - Input Parameters

Firing Rate	0300				0350				0400				0500				0650				0800				1000			
	(Delta P - W.C.)		Blower (RPM)		(Delta P - W.C.)		Blower (RPM)		(Delta P - W.C.)		Blower (RPM)		(Delta P - W.C.)		Blower (RPM)		(Delta P - W.C.)		Blower (RPM)		(Delta P - W.C.)		Blower (RPM)		(Delta P - W.C.)		Blower (RPM)	
Fuel	NG	LP	NG	LP	NG	LP	NG	LP	NG	LP	NG	LP	NG	LP	NG	LP	NG	LP	NG	LP	NG	LP	NG	LP	NG	LP	NG	LP
100%	2.50	2.50	7465	7625	3.20	3.10	8600	8680	3.90	3.80	9730	9985	3.50	3.50	11170	11260	3.90	4.70	8150	8635	5.80	5.20	8660	8245	4.90	5.20	8550	8655

Firing Rate	0300				0350				0400				0500				0650				0800				1000			
	(Delta P - W.C.)		Blower (RPM)		(Delta P - W.C.)		Blower (RPM)		(Delta P - W.C.)		Blower (RPM)		(Delta P - W.C.)		Blower (RPM)		(Delta P - W.C.)		Blower (RPM)		(Delta P - W.C.)		Blower (RPM)		(Delta P - W.C.)		Blower (RPM)	
Fuel	NG	LP	NG	LP	NG	LP	NG	LP	NG	LP	NG	LP	NG	LP	NG	LP	NG	LP	NG	LP	NG	LP	NG	LP	NG	LP	NG	LP
Ignition	1.00	1.00	4345	4325	1.00	1.00	4345	4325	1.00	0.90	4345	4325	0.90	0.90	4300	4335	0.80	0.90	3375	3380	0.90	0.90	3410	3390	0.90	0.90	3380	3407
6:1	0.50	0.50	2075	2100	0.50	0.50	2075	2100	0.50	0.50	2075	2100	0.50	0.50	2285	2320	0.50	0.50	2100	2090	0.50	0.50	2110	2050	0.50	0.50	2085	2075
7:1	0.45	0.45	1915	1905	0.45	0.45	1915	1905	0.45	0.45	1915	1905	0.45	0.45	2085	2085	0.45	0.45	1945	1950	0.45	0.45	1965	1915	0.45	0.45	1905	1925
8:1	0.40	0.40	1750	1710	0.40	0.40	1750	1710	0.40	0.40	1750	1710	0.40	0.40	1890	1850	0.40	0.40	1785	1805	0.40	0.40	1815	1775	0.40	0.40	1725	1780
9:1	N/A	N/A	N/A	N/A	0.35	N/A	1655	N/A	0.35	N/A	1655	N/A	0.35	N/A	1750	N/A	0.35	N/A	1690	N/A	0.35	N/A	1740	N/A	0.35	N/A	1625	N/A
10:1	N/A	N/A	N/A	N/A	N/A	N/A	N/A	N/A	0.30	N/A	1560	N/A	0.30	N/A	1615	N/A	0.30	N/A	1590	N/A	0.30	N/A	1665	N/A	0.30	N/A	1520	N/A

Firing Rate	1251				1501				1751				2001				2501				3001			
	(Delta P - W.C.)		Blower (RPM)		(Delta P - W.C.)		Blower (RPM)		(Delta P - W.C.)		Blower (RPM)		(Delta P - W.C.)		Blower (RPM)		(Delta P - W.C.)		Blower (RPM)		(Delta P - W.C.)		Blower (RPM)	
Fuel	NG	LP	NG	LP	NG	LP	NG	LP	NG	LP	NG	LP	NG	LP	NG	LP	NG	LP	NG	LP	NG	LP	NG	LP
100%	2.40	3.20	9210	9551	4.50	4.80	6900	6380	7.30	6.70	6650	7178	9.40	8.30	6815	6420	5.20	5.10	7004	7400	7.20	7.20	8610	9010

Firing Rate	1251				1501				1751				2001				2501				3001			
	(Delta P - W.C.)		Blower (RPM)		(Delta P - W.C.)		Blower (RPM)		(Delta P - W.C.)		Blower (RPM)		(Delta P - W.C.)		Blower (RPM)		(Delta P - W.C.)		Blower (RPM)		(Delta P - W.C.)		Blower (RPM)	
Fuel	NG	LP	NG	LP	NG	LP	NG	LP	NG	LP	NG	LP	NG	LP	NG	LP	NG	LP	NG	LP	NG	LP	NG	LP
Ignition	0.33	0.40	2190	2196	0.50	0.50	2086	2088	0.79	0.77	2130	2115	1.04	1.00	2170	2148	0.53	0.40	2130	2130	0.53	0.53	2130	2140
6:1	0.32	0.35	2195	2130	0.40	0.35	1509	1484	0.53	0.54	1710	1716	0.64	0.50	1670	1522	0.26	0.35	1392	1491	0.34	0.33	1653	1630
7:1	0.31	N/A	1985	N/A	0.37	0.33	1395	1365	0.45	0.45	1560	1550	0.55	0.45	1535	1425	0.22	0.33	1257	1323	0.28	0.28	1470	1485
8:1	0.25	N/A	1780	N/A	0.35	0.30	1276	1247	0.38	0.37	1415	1390	0.45	0.40	1400	1325	0.17	0.30	1122	1155	0.22	0.23	1285	1340
9:1	0.23	N/A	1690	N/A	0.33	N/A	1230	N/A	0.36	N/A	1312	N/A	0.42	N/A	1314	N/A	N/A	N/A	N/A	N/A	0.20	N/A	1188	N/A
10:1	0.2	N/A	1550	N/A	0.3	N/A	1205	N/A	0.35	N/A	1230	N/A	0.40	N/A	1230	N/A	N/A	N/A	N/A	N/A	0.17	N/A	1092	N/A

At full input, use RPM as the primary guideline with delta-p as reference as readings may vary up to (0.5" w.c.) below the indicated value. Low fire delta-p must not be less than the indicated turndown value.
To determine signal in mm WC, multiply signal pressure by 25.4. See Factory Combustion label for Dual Fuel combustion data
Verify the proper fuel type (Natural Gas or Propane) is selected - (reference the Boiler Type Settings Dialog in the HeatNet Control Manual).

Torus Series "HeatNet Control" Troubleshooting (Firing the Torus Boiler/Water Heater)

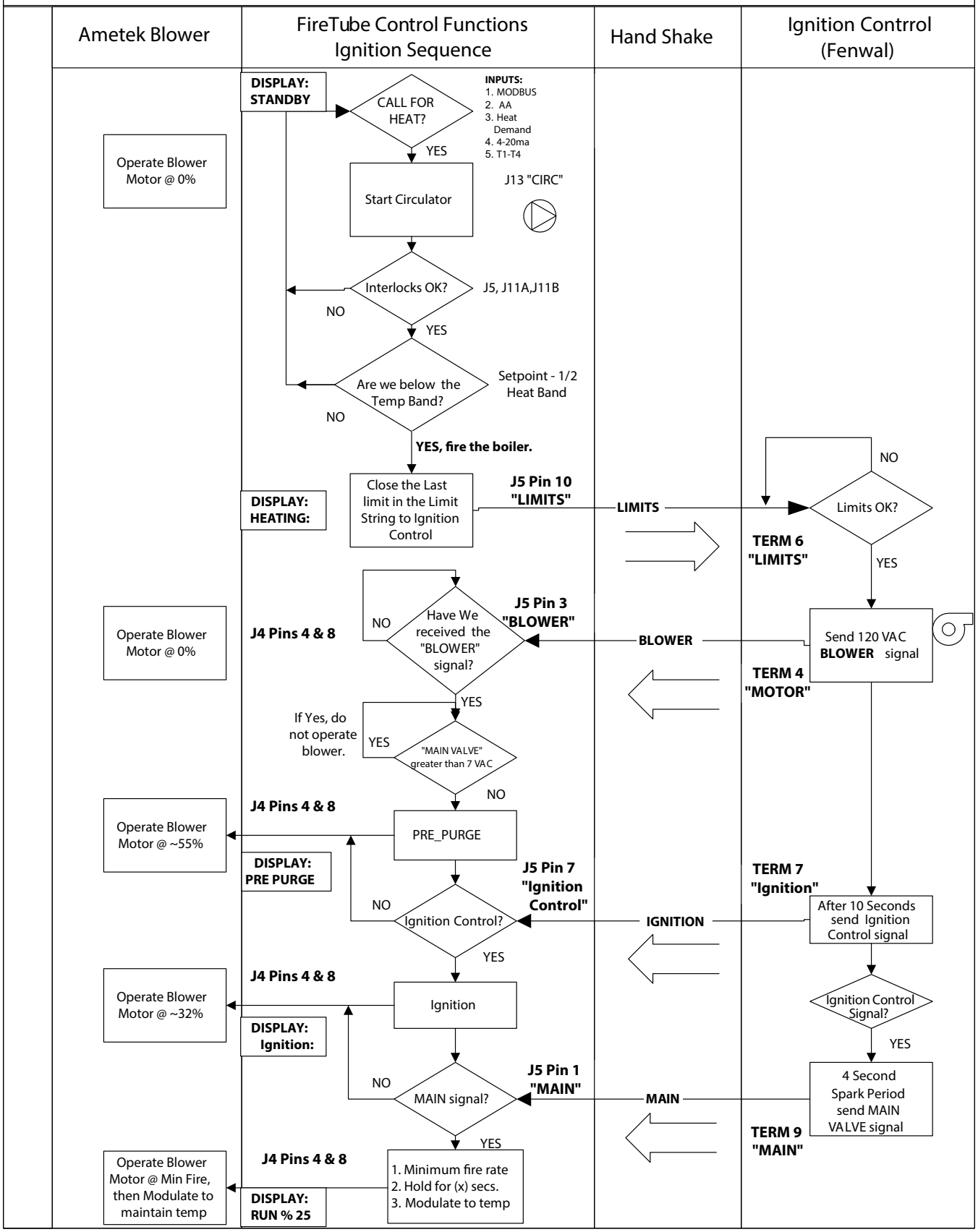

Ignition Safety

To test the ignition safety shutoff device, close the manual shutoff valve 1 (Figure 21) in the gas supply line. Within 5 seconds of main burner flame extinction, the main gas valve solenoid should close. The control board will lockout and display “LOW GAS PRESSURE”. Open the manual shutoff valve in the gas supply line and reset the control board by toggling the power switch.

To confirm the input of the unit follow the instructions in the INPUT RATE section below.

Input Rate, Natural Gas

1. Turn off all other gas appliances that use the same gas meter as the boiler.
2. Call your gas supplier and ask for the heating value of the gas (Btu per cu/ft).
3. Start the boiler and let it run for 15 minutes.
4. With the boiler operation clock the time that it takes to burn 10 cu/ft of gas at full fire
5. Insert the heating value and the time, in seconds, into the formula below.
6. Input = 10 / seconds (Btu per cu/ft)(3600).
7. If the computed rate exceeds the desired input follow section “operating instructions” to make the appropriate adjustments.

⚠CAUTION Never increase the input to the boiler above that for which it is rated. Doing so can cause premature failure of the boiler!

Low Water Cutoff

Ensure that the low water cutoff device(s) function properly.

Test in accordance with the manufacturer’s instructions included with the device(s).

DIAGNOSTICS

The Torus has a display that indicates the sequence of operation, Figure 22. The display will also list faults should the unit fail to operate. An explanation of each fault is listed below.

STANDBY: Indicates that power is being supplied to the unit and there is no call for heat.

STANDBY OPERATING LIMIT: Indicates that the operating limit if used is open.

Fenwal “flashing”: Indicates that there is a call for heat and the Fenwal is locked out.

STANDBY START DEMAND: Indicates that there is a call for heat and the Fenwal is not functioning or is locked out.

STANDBY WATER LIMIT: Indicates that either the high limit, low water cut off, or both are open without a call for heat.

LOCKOUT WATER LIMIT: Indicates that either the high limit, low water cut off, or both are open with a call for heat.

STANDBY GAS PRESSURE: Indicates that the low gas pressure switch or the high gas pressure switch if used is open without a call for heat.

LOCKOUT GAS PRESSURE: Indicates that the low gas pressure switch or the high gas pressure switch if used is open with a call for heat.

WAITING FOR FLOW: Indicates that minimum flow hasn't been achieved.

FAULT INSUFFICIENT FLOW: Indicates that inadequate flow is present.

LWCO LOCKOUT: Indicates low or no water in the boiler.

MAINTENANCE

⚠WARNING Disconnect electrical power and close the manual gas shut off valve before performing maintenance or severe personal injury may result!

⚠CAUTION Servicing, inspection and adjustment must be done by a trained technician in accordance with all applicable local and national codes. Improper servicing or adjustment can damage the boiler!

The boiler/water heater must be inspected at least once a year and before each heating season. Make sure that combustion readings and air box pressures are taken on each boiler/water heater and match the desired emissions outlined under the specification in the Installation Manual — adjust as necessary. Accessing the burner compartment isn't necessary during normal maintenance unless combustion values or air box pressures don't meet specification.

⚠CAUTION Improper burner servicing can result in premature burner failure voiding the warranty!

Burner Removal & Inspection

If the burner requires cleaning, remove and clean utilizing a vacuum cleaner. If the burner shows signs of damage, the burner must be changed and combustion checked and corrected if needed. When replacing the burner, check the integrity of the burner gasket - the gasket must be replaced if damaged.

⚠WARNING Wear a tightly fitted dust mask when servicing the burner and gently handle the burner and its gasket to prevent inhalation of airborne fibers.

NOTICE Do not attempt to remove the burner without having a burner gasket on hand.

Heat Exchanger Cleaning

During scheduled annual inspection, use a vacuum to remove any deposits from the heat exchanger fireside heating surfaces. If required brush the heat exchanger with a nylon bristle brush, do not use a metal brush. Cleaning of the heat exchanger using solvents is prohibited.

Air Intake & Vent System

Thoroughly inspect the air intake and vent systems for any signs of blockage, corrosion or leakage and periodically clean screen in the vent terminal (where applicable). Immediately replace any unsound vent system piping. Inspect the air filter and replace when required.

Controls

Use the BOILER OPERATION and CHECKING AND ADJUSTMENT sections of this manual for reference.

1. Check the operating controls for proper operation.

2. The probe on a probe low water cut off must be removed, cleaned and inspected at least once a year. Ensure that the low water cutoffs operate properly. If not, replace them.

3. When utilized, the flow sensor isolation valves must be open in order for proper operation.

NOTICE In the unlikely event that the SIKA flow sensor requires cleaning, in order to flush the flow sensor, close the ball valve installed upstream of the flow sensor, connect a hose to the drain fitting provided and open the drain valve. Drain approximately a gallon of water to properly flush the flow sensor. The drain is then closed and the upstream valve reopened.

4. The relief valve should not weep or discharge water at normal system pressure - this may be due to thermal expansion in a closed water supply system. If it does contact a qualified service technician to have it inspected. NEVER plug or try to clean or repair the relief valve! If the valve fails to operate properly, have it replaced!

5. The aquastat high limit controls the maximum water temperature in the boiler/water heater. It is adjustable from **100°F**, *38°C* to **210°F**, *99°C*. If the water temperature reaches the set temperature before the demand for heat has been met, the aquastat high limit should shut the boiler/water heater off. The water temperature should never exceed the maximum set point of **210°F**, *99°C*. The aquastat high limit cannot be repaired. If it fails to function properly replace it.

6. Visually check the main burner flames to ensure proper operation, see Figure 26.

⚠WARNING Visual flame appearance with proper combustion will have a blue appearance at full input. Areas of deep red indicate an infrared condition requiring a combustion adjustment to reduce CO_2 levels.

Figure 26 - Main Burner Flame

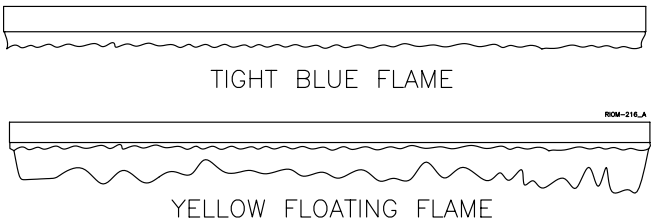

Figure 27 - Pressure Switches

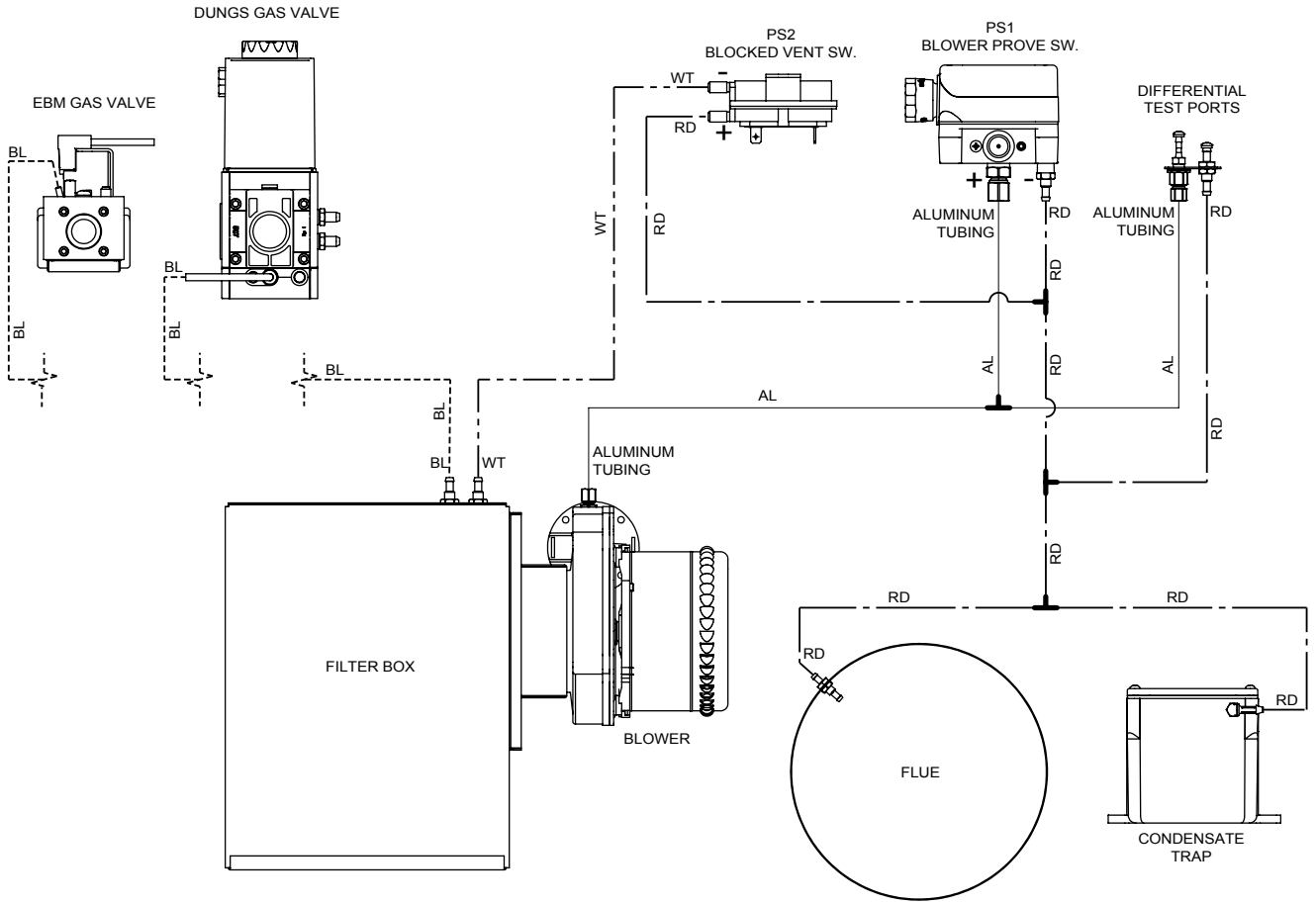

LEGEND	
AL	ALUMINUM
BL	BLUE EPDM TUBING
RD	RED EPDM TUBING
WT	WHITE EPDM TUBING

MODEL SIZE	PS1 - BLOWER PROVE SW.	PS2 - BLOCKED VENT SW.
0300 TO 1000	0.28" W.C.	4.0" W.C.
1251	0.20" W.C.	
1501, 1751 & 2001	0.24" W.C.	
2501 & 3001	0.16" W.C.	

NOTES:

1. ALUMINUM TUBING MUST BE LEAK TESTED IF REMOVED FOR ANY REASON.
2. ALL RED TUBING MUST BE SLOPED DOWNWARD TOWARDS THE CONDENSATE DRAIN TO AVOID ANY FLUID ACCUMULATION.

Figure 28 - Relays, Interlocks and Boiler Status

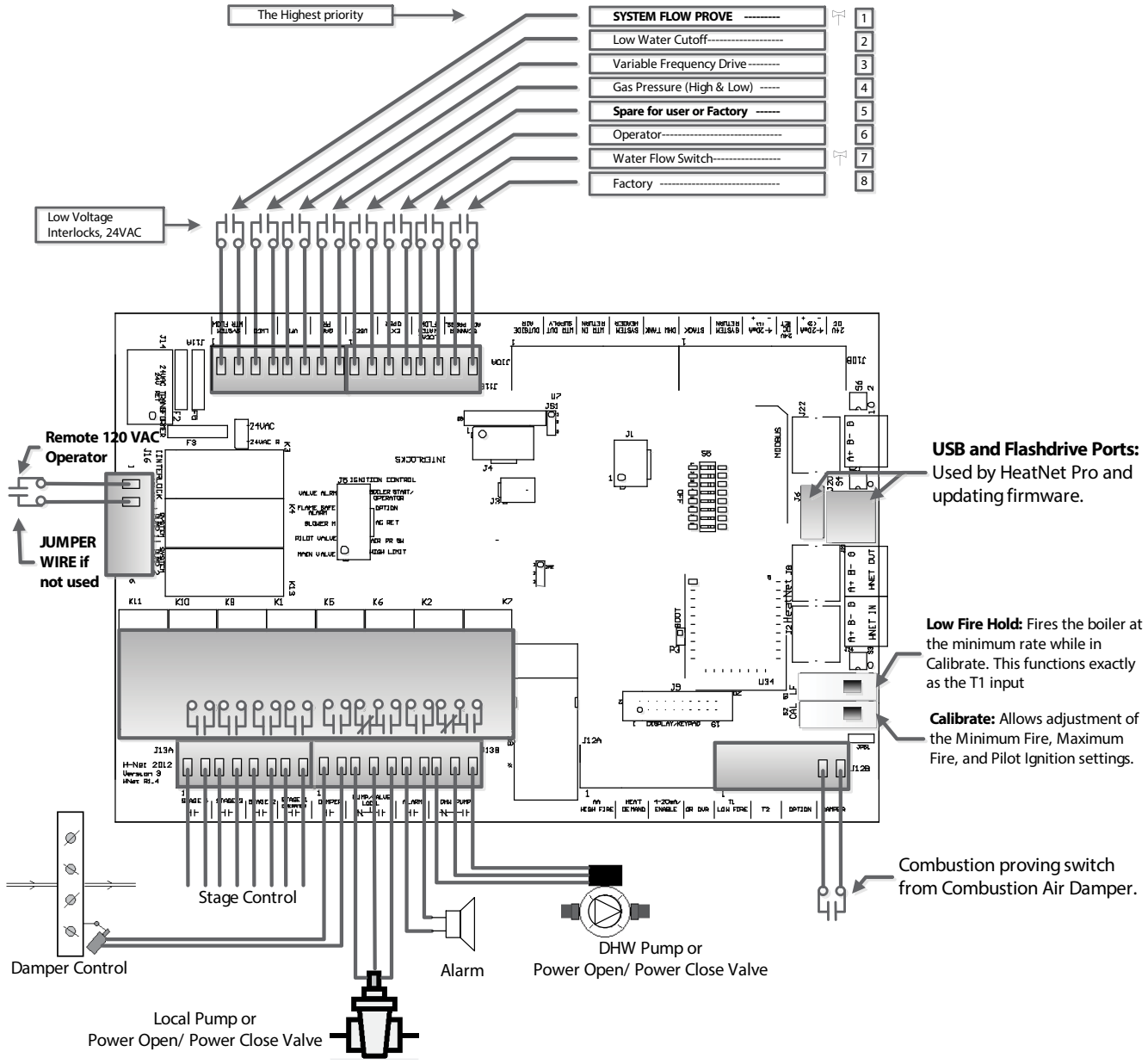

Figure 29 - Exploded View and Replacement Parts, (300-1000)

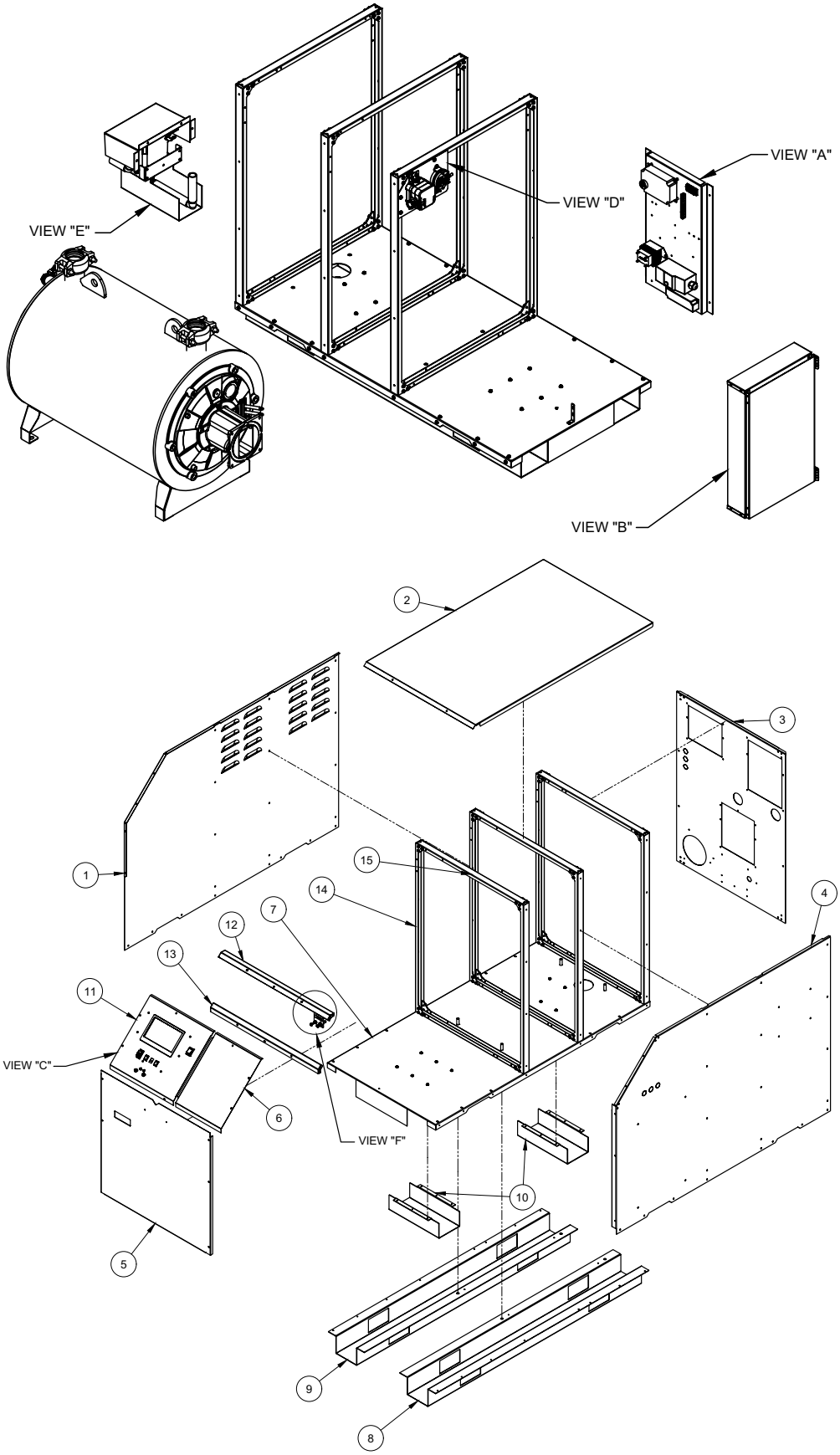

Figure 29 - Exploded View and Replacement Parts, (300-1000) - Continued

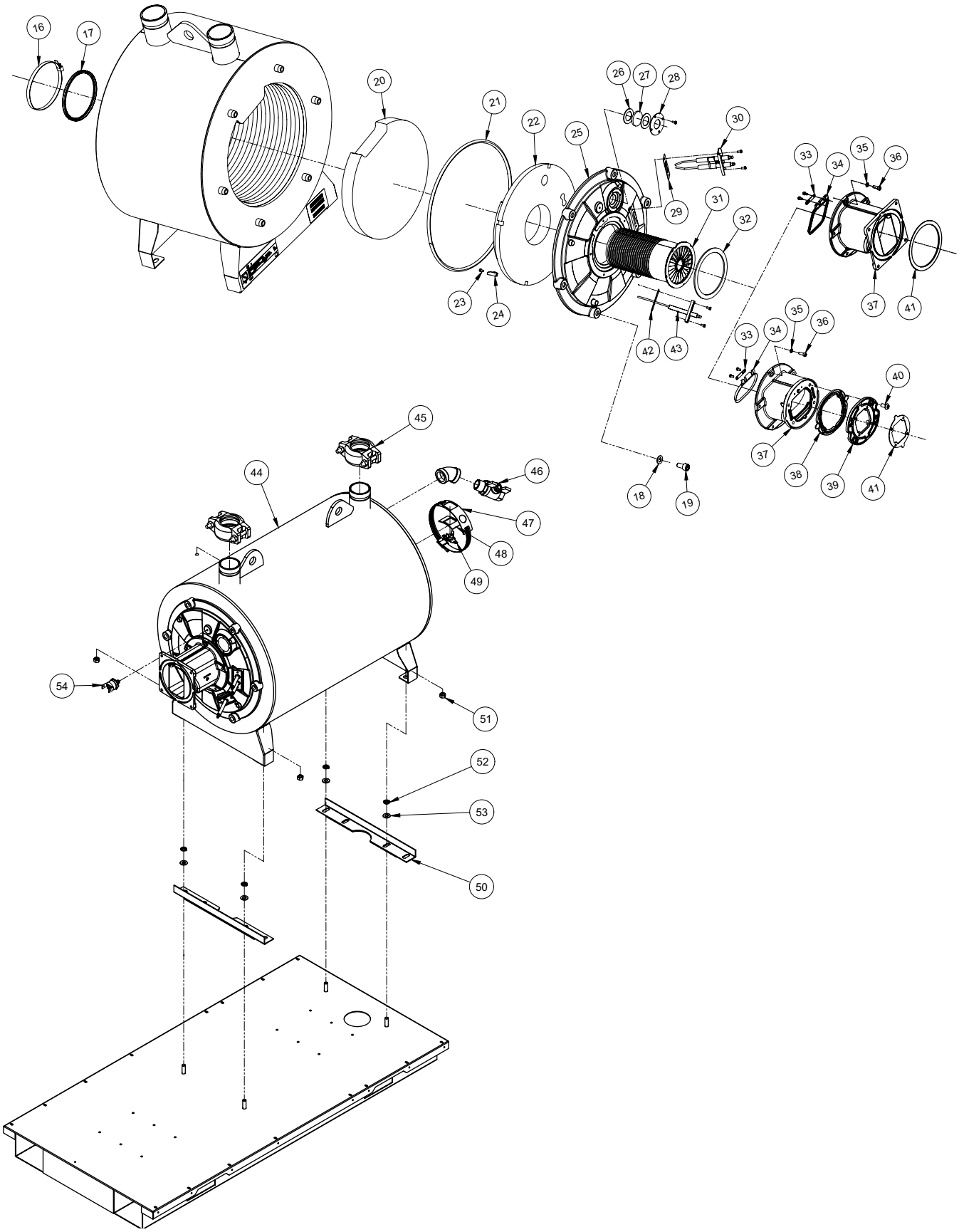

Figure 29 - Exploded View and Replacement Parts, (300-1000) - Continued

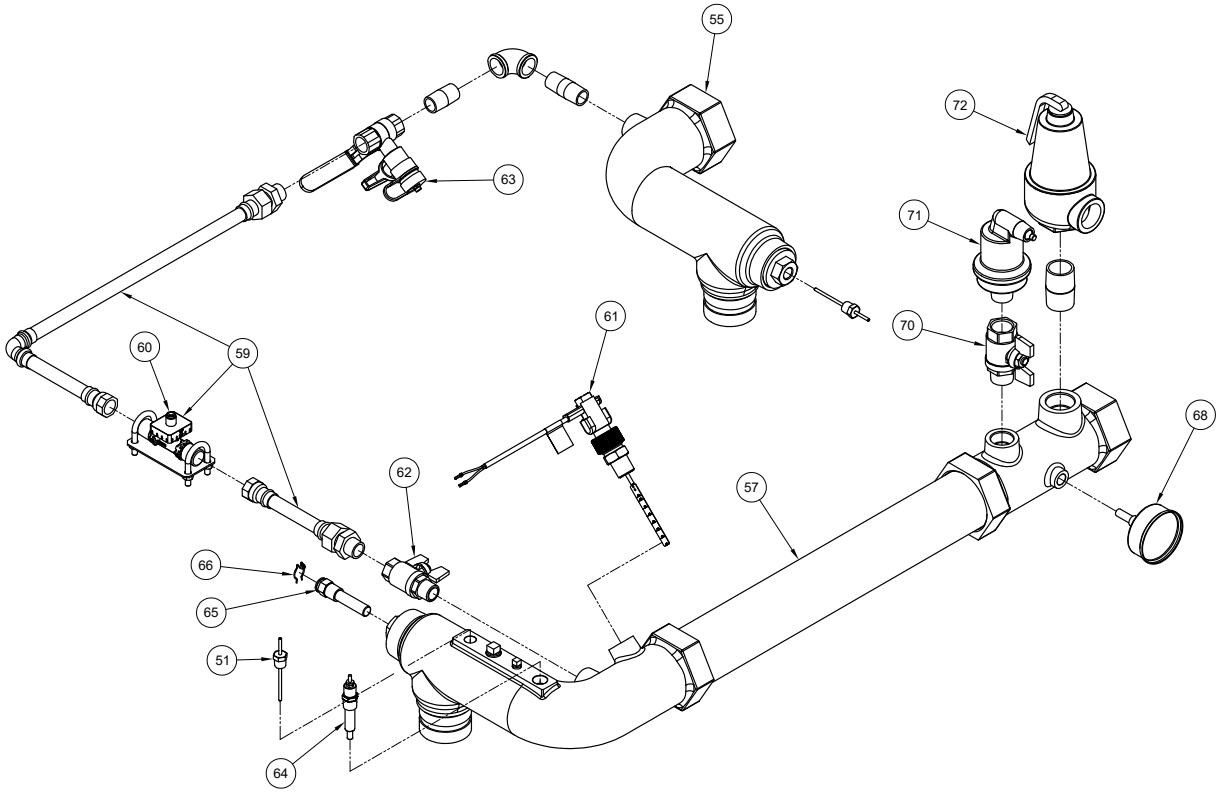

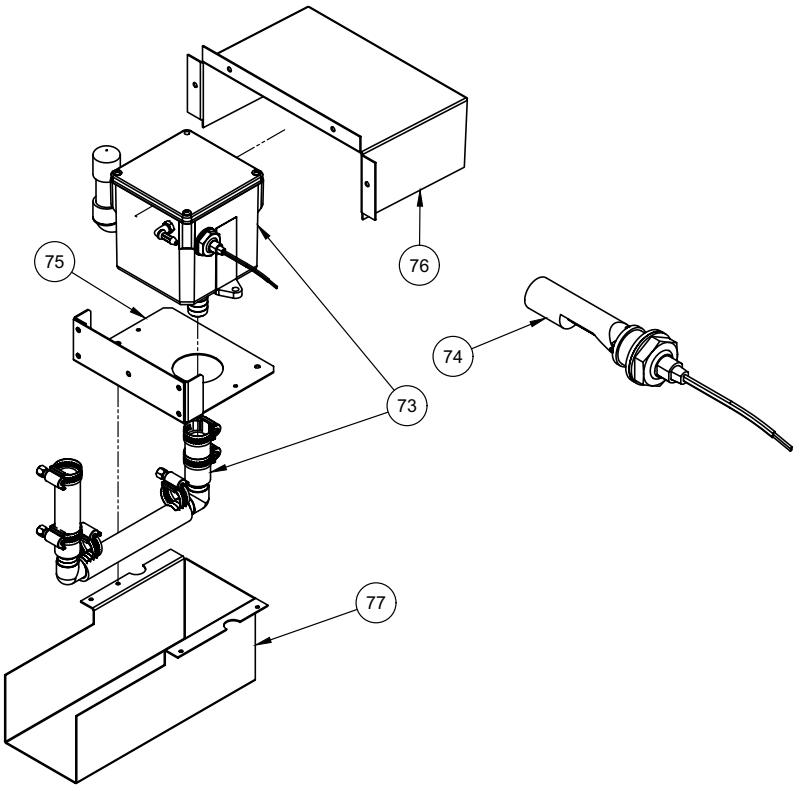

VIEW "E"

Figure 29 - Exploded View and Replacement Parts, (300-1000) - Continued

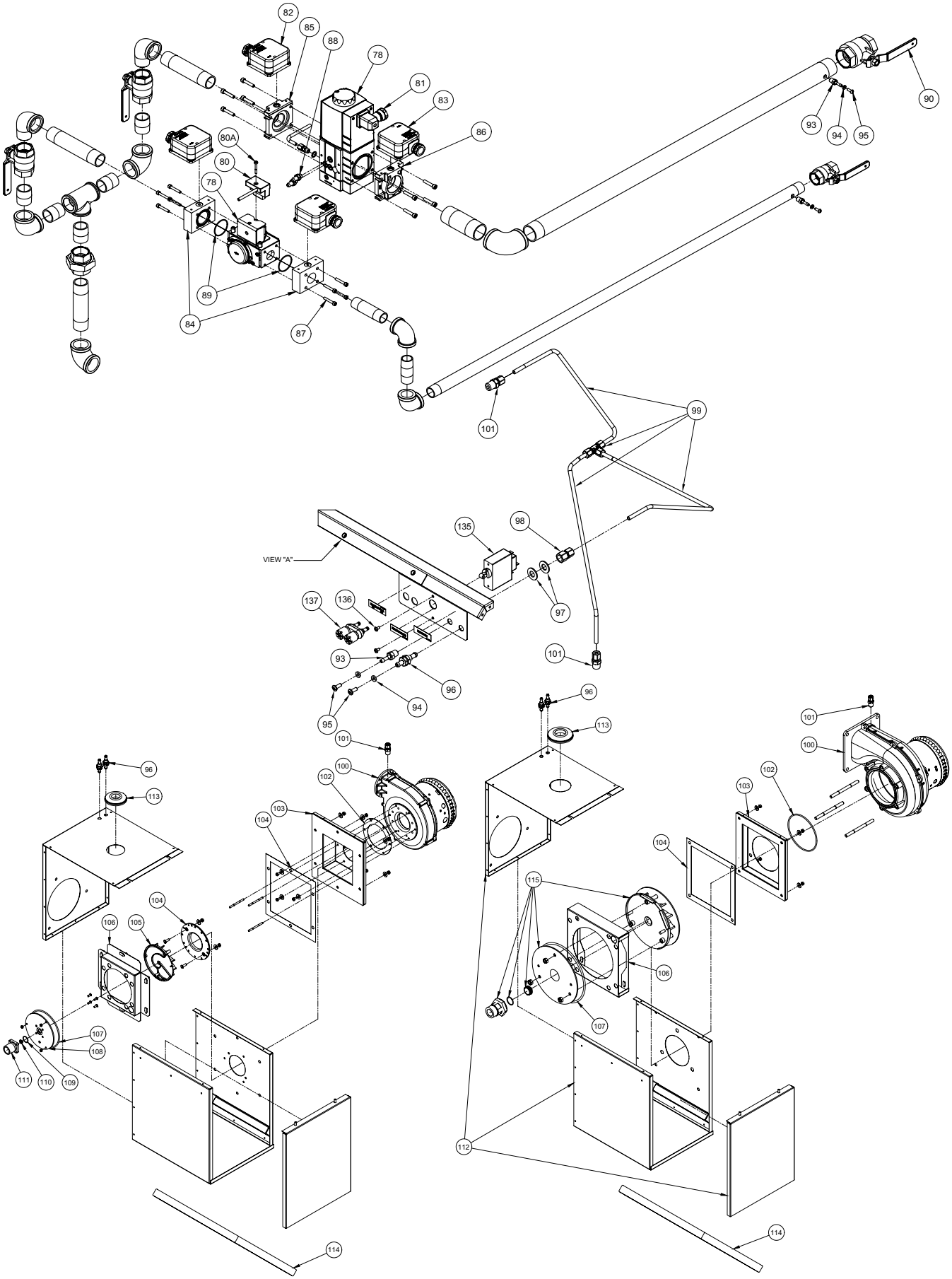

Figure 29 - Exploded View and Replacement Parts, (300-1000) - Continued

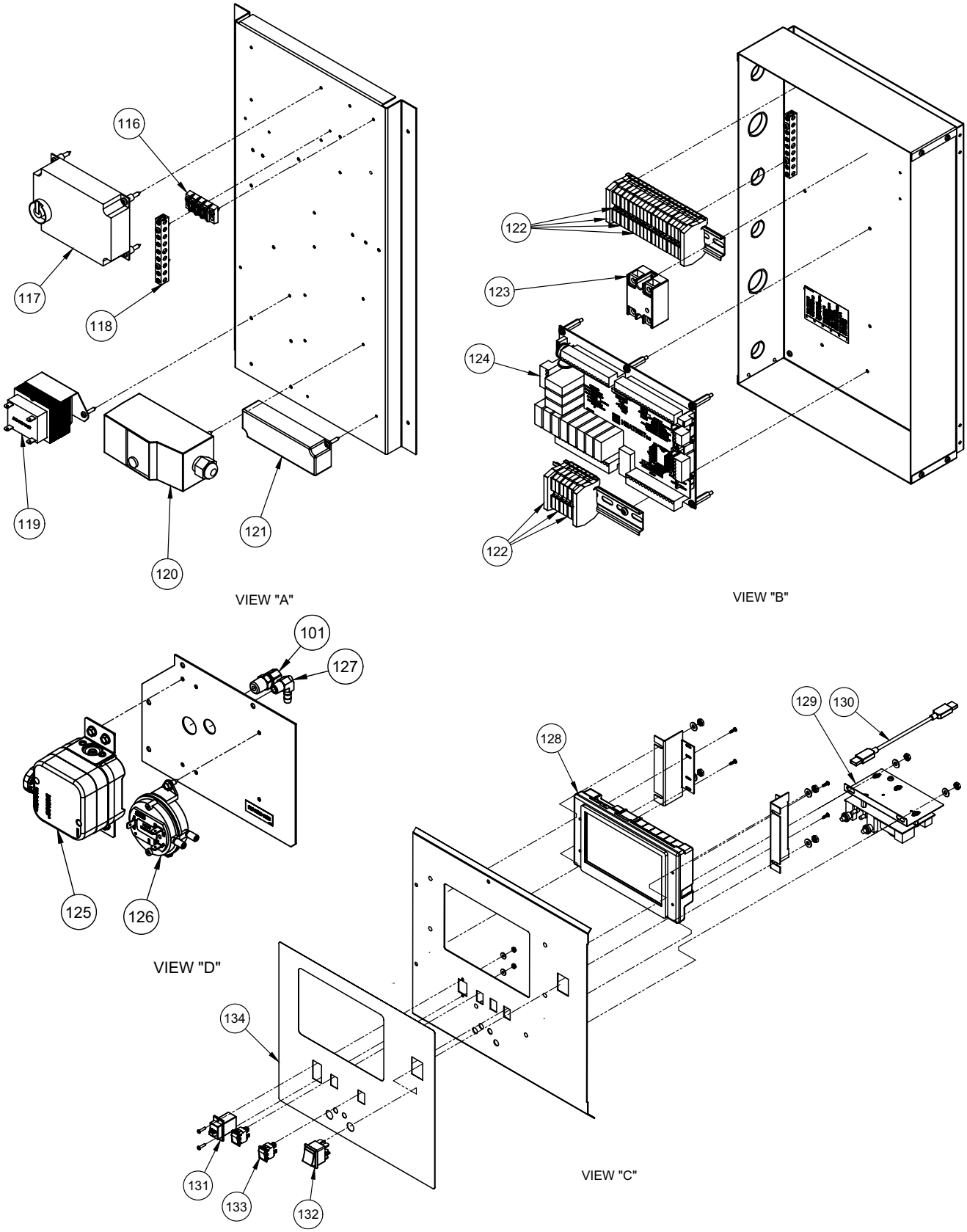

Torus Parts List - 300 - 1000

Ref No.	Description	Part No.	300 - 400	500	650	800	1000
1	Weldment, LH Panel	74-1038-006	1				
		74-1038-007		1			
		74-1038-008			1		
		74-1038-009				1	
		74-1038-010					1
2	Panel, Top	03-6006-001	1				
		03-6006-002		1			
		03-6006-003			1		
		03-6006-004				1	
		03-6006-005					1
3	Panel, Rear	03-4769-001	1	1	1	1	1
4	Weldment, RH Panel	74-1039-006	1				
		74-1039-007		1			
		74-1039-008			1		
		74-1039-009				1	
		74-1039-010					1
5	Panel, Front	03-6005-001	1	1	1	1	1
6	Panel, Blank	03-6008-001	1	1	1	1	1
7	Panel, floor	03-4782-001	1				
		03-4782-002		1			
		03-4782-003			1		
		03-4782-004				1	
		03-4782-005					1
8	Weldment, Leg, RH	74-1033-001	1				
		74-1033-002		1			
		74-1033-003			1		
		74-1033-004				1	
		74-1033-005					1
9	Weldment, Leg, LH	74-1032-001	1				
		74-1032-002		1			
		74-1032-003			1		
		74-1032-004				1	
		74-1032-005					1
10	Leg, Extension	03-4779-001	1	2	2	2	2
		03-4779-002	1				
11	Assembly, Control Panel	75-0602-001	1	1	1	1	1
12	Weldment, Support, Cross Brace, Test Port	74-1040-001	1	1	1	1	1
13	Weldment, Support, Cross Brace	74-1040-002	1	1	1	1	1
14	Support, Vertical	03-4783-001	1	1	1	1	1
15	Support, Horizontal	03-4784-001	1	1	1	1	1
16	Flue Outlet Clamp	22-0101-001	1	1	1	1	1
		22-0101-002			1	1	1
17	Flue Outlet Gasket	22-0102-001	1	1	1	1	1
		22-0102-002			1	1	1
18	Washer, M10	57-1101-010	6	6	6	6	6
19	Screw, M10x16	57-1478-011	6	6	6	6	6
20	Heat Exchanger Interior Insulation	22-0103-001	1	1	1	1	1
21	Burner Door Gasket	22-0104-001	1	1	1	1	1
22	Burner Door Insulation	22-0105-001	1	1	1	1	1
23	Screw, M4x8	57-1474-006	14	14	14	14	14
24	Clip, Burner Door Insulation	22-0001-001	4	4	4	4	4
25	Burner Door	22-0106-001	1	1	1	1	1
26	Lens Gasket	22-0008-001	2	2	2	2	2
27	Lens	22-0007-001	1	1	1	1	1
28	Lens Mounting Plate	22-0107-001	1	1	1	1	1
29	Ignition Electrode Gasket	22-0011-001	1	1	1	1	1
30	Ignition Electrode	22-0108-001	1	1	1	1	1
31	Burner	22-0109-001	1				
		22-0109-002		1			
		22-0109-003			1		
		22-0109-004				1	
		22-0109-005					1
32	Burner Gasket	22-0110-001	1	1	1	1	1
33	Flap Retainer	22-0111-001	1	1	1	1	1
34	Blower Flap	22-0117-001	1	1			
		22-0117-002			1	1	1
35	Washer, M5	57-1101-006	5	5	5	5	5
36	Screw, M5x16	57-1475-011	5	5	5	5	5
37	Manifold Intake	22-0112-001	1	1			
		22-0112-002			1	1	1
38	Transition Adapter Gasket	22-0113-001	1	1			
39	Transition Adapter	22-0114-001	1	1			

Torus Parts List - 300 - 1000

Ref No.	Description	Part No.	300 - 400	500	650	800	1000
40	Screw, M8x16	57-0980-008	4	4			
41	Blower Outlet Gasket	22-0115-001	1	1			
		22-0115-002			1	1	1
42	Ionization Electrode Gasket	22-0012-001	1	1	1	1	1
43	Ionization Electrode	22-0116-001	1	1	1	1	1
44	Heat Exchanger, Boiler	74-1001-001	1				
		74-1001-002		1			
		74-1001-003			1		
		74-1001-004				1	
		74-1001-005					1
	Heat Exchanger, Water Heater	74-1002-001	1				
		74-1002-002		1			
		74-1002-003			1		
		74-1002-004				1	
		74-1002-005					1
45	Coupling, Grooved	53-6404-004	2	2	2	2	2
46	Ball Valve, T-Handle	11-0471-002	1	1	1	1	1
47	Weldment, Flue Vent Temperature Switch Clamp	74-1038-001	1	1			
		74-1038-002			1	1	1
48	Gasket, Flue Vent Temp Switch Weldment	06-0226-001	1	1	1	1	1
49	Flue Vent Temp Switch	14-0130-001	1	1	1	1	1
50	Bracket, Heat Exchanger Mounting	74-1035-001	2	2	2	2	2
51	Nut, Hex, 3/8-16	57-0490	4	4	4	4	4
52	Split Lock Washer, 3/8	57-0603	4	4	4	4	4
53	Flat Washer, 3/8	57-0563	4	4	4	4	4
54	High Limit, 350F, Therm-O-Disc	14-0129-001	1	1	1	1	1
55	Casting, Return Header, WB	01-0302-001	1	1	1	1	
		01-0302-002					1
56	Casting, Return Header, WW	01-0501-001	1	1	1	1	
		01-0501-002					1
57	Weldment, Supply, WB	74-1051-001	1				
		74-1051-002		1			
		74-1051-003			1		
		74-1051-004				1	
		74-1051-005					1
58	Weldment, Header, Supply, WW	74-1052-001	1				
		74-1052-002		1			
		74-1052-003			1		
		74-1052-004				1	
		74-1052-005					1
59	"Assembly, Flow Sensor Piping (Optional) (Sensor Included)"	75-0621-002	1	1	1	1	1
60	Flow Sensor, Sika (Optional)	14-0330-002	1	1	1	1	1
61	Flow Switch, Sika (STD)	14-0207	1	1	1	1	1
62	Ball Valve, 1/2 NPT	11-0471-001	1	1	1	1	1
63	Ball Valve, 1/2 NPT w/ Hose Drain	13-0252-001	1	1	1	1	1
64	Probe, LWCO, 3/8 NPT	14-0280-001	1	1	1	1	1
65	Well, 3/8 NPT X 11/16 HEX X 13/32" ID X 3"	13-0104	1	1	1	1	1
66	Sensor Well Wire Clip	48-0405	1	1	1	1	1
67	Return & Supply Sensor, 10K	14-0333-001	2	2	2	2	2
68	T&P Gauge, 0-250 PSI (750 to 160 PRV)	13-0312	1	1	1	1	1
69	T&P Gauge, 0-100 PSI (30 to 60 PRV)	13-0313	1	1	1	1	1
70	Ball Valve, 3/4 NPT	11-0471-002	1	1	1	1	1
71	Air Vent	13-0352-001	1	1	1	1	1
72	Pressure Reilef Valve, 50psi(Boiler Std)	30-0360	1	1	1	1	
		30-0374					1
	Pressure Reilef Valve, 125psi(Water Heater Std, Canada)	30-0364	1	1	1	1	1
	Pressure Reilef Valve, 125psi(Water Heater Std, USA)	13-0080	1	1	1	1	1
73	Assembly, Condensate Trap	75-0583-001	1	1	1	1	1
74	Float Switch	14-0207	1	1	1	1	1
75	Bracket, Condensate Trap	03-4756-001	1	1	1	1	1
76	Cover, Condensate Trap	03-4799-001	1	1	1	1	1
77	Shield, Condensate Trap	03-4798-001	1	1	1	1	1
78	Gas Valve, EBM	11-0726-001	1 (NG) / 1 (LP)	1 (NG) / 1 (LP)	1 (LP)	1 (LP)	1 (LP)
	Gas Valve, Dungs MBC 1000	11-0230		-	1 (NG)	1 (NG)	1 (NG)
79	Connection Box, Harness, EBM	11-0727-001	1 (NG) / 1 (LP)	1 (NG) / 1 (LP)	1 (LP)	1 (LP)	1 (LP)
80	Mounting Screw, Harness, EBM	57-0975-005	1 (NG) / 1 (LP)	1 (NG) / 1 (LP)	1 (LP)	1 (LP)	1 (LP)
81	Wire Harness, Gas Valve Connector, Dungs	40-0418-001			1 (NG)	1 (NG)	1 (NG)
82	High Gas Pressure Switch	11-0421	1	1	1	1	1
83	Low Gas Pressure Switch	11-0422	1	1	1	1	1
84	Gas Valve Flange, 3/4 NPT, EBM	04-5007-001	1 (NG) / 2 (LP)	1 (NG) / 2 (LP)	1 (LP)	1 (LP)	1 (LP)
	Gas Valve Flange, 1 NPT, EBM	04-5007-002	1 (NG)	1 (NG)	1 (LP)	1 (LP)	1 (LP)
NS	Pressure S.W. Port Sealing Screw	57-2491-005	2 (NG) / 2 (LP)	2 (NG) / 2 (LP)	2 (LP)	2 (LP)	2 (LP)

Torus Parts List - 300 - 1000

Ref No.	Description	Part No.	300 - 400	500	650	800	1000
85	Gas Valve Flange, 1-1/4 NPT, Dungs	11-0237-001			1 (NG)	1 (NG)	1 (NG)
86	Gas Valve Flange, 1 NPT Adjustable Shutter, Dungs	11-0237-001			1 (NG)	1 (NG)	1 (NG)
87	Screw, EBM Gas Valve Flange	57-1475-016	8 (NG) / 8 (LP)	8 (NG) / 8 (LP)			
88	Test Port, Dungs	11-0354			2	2	2
89	O-Ring, EBM Gas Valve Flange	06-0095-029	2 (NG) / 2 (LP)	2 (NG) / 2 (LP)	2 (LP)	2 (LP)	2 (LP)
90	Ball Valve, 3/4 NPT	11-0461	1 (LP)	1 (LP)	1 (LP)	1 (LP)	1 (LP)
91	Ball Valve, 1 NPT	11-0456	1 (NG)	1 (NG)			
92	Ball Valve, 1-1/4 NPT	11-0457			1 (NG)	1 (NG)	1 (NG)
93	Test Port	53-0315	1	1	1	1	1
94	Washer, Rubber	06-0133	1	1	1	1	1
95	Screw, Test Port	57-0391	1	1	1	1	1
96	Test Port, Bulkhead	55-0152	1	1	1	1	1
97	Washer	57-0563	2	2	2	2	2
98	Compresstion Fitting, 1/4 NPT	55-0001	1	1	1	1	1
99	Assembly, Pressure Switch Tubing	75-0608-001	1	1	1	1	1
100	Blower	12-0031-001	1	1			
		12-0032-001			1	1	1
101	Compresstion Fitting, 1/8 NPT	55-0008	1	1	1	1	1
102	Gasket, Blower Adapter to Blower	06-0232-001	1	1			
	O-ring, Blower Adapter to Blower	06-0096-001			1	1	1
103	Gasket Tape, EPDM	06-0151-2825	1	1	1	1	1
104	Plate, RG148 Adaptor	11-0730-001	1	1			
105	Plate, Swirl	11-0729-001	1	1			
106	Weldment, Mixing Box	74-1046-001	1				
		74-1046-002		1			
		74-1046-003			1		
		74-1046-004				1	
		74-1046-005					1
107	Gasket, Orifice Plate	06-0228-001	1	1			
		06-0228-002			1	1	1
108	Plate, Nozzle	11-0731-001	1	1			
109	O-ring, Orifice	06-0099-032	1	1			
110	Orifice, Injector, 9.5mm	11-0728-002	1	1			
111	Flange, 3/4 NPT	11-0732-001	1	1			
112	Assembly, Filter Box(Including Filter)	75-0591-001	1	1			
		75-0591-002			1	1	1
113	Pipe Grommet	06-0069	1	1			
		06-0070			1	1	1
114	Filter	09-0503-001	1	1	1	1	1
115	Swirl Plate Kit, Dungs	11-0658-002			1	1	1
116	Terminal Bock, Power Supply	48-0169	1	1	1	1	1
117	Ignition Control Module, Fenwal	16-0063-001	1	1	1	1	1
118	Ground Bar	48-0446	1	1	1	1	1
119	Transformer, 120V to 24V, 50VA	15-0007	1	1	1	1	1
120	High Limit, Manual Reset	14-0127	1	1	1	1	1
121	Power Supply, 120V to 12V	15-0352	1	1	1	1	1
122	Terminal Block, Screwless Feed Through	48-0178-002	24	24	24	24	24
	Terminal Block Jumper, 2 Pole	48-0179-002	6	6	6	6	6
	Terminal Block Jumper, 3 Pole	48-0180-002	4	4	4	4	4
	Terminal Block Cover	48-0182-001	10	10	10	10	10
	Terminal Block, End Bracket	48-0185-001	4	4	4	4	4
123	Relay, Solid State, 100-240VAC, 20A, 1PH	15-0137	1	1	1	1	1
124	Board, HeatNet, Full, Sata	40-0092	1	1	1	1	1
125	Pressure Switch, 0.3" WC	14-0071	1	1	1	1	1
126	Pressure Switch, 4.0" WC	14-0070	1	1	1	1	1
127	Compression Fitting, Elbow, 1/8NPT	55-0065-001	1	1	1	1	1
128	Touch Screen w/Enclosure	40-0091-002	1	1	1	1	1
129	LWCO & Bracket	75-0030-001	1	1	1	1	1
130	USB Cable	44-0065	1	1	1	1	1
131	USB Port	44-0066	1	1	1	1	1
132	Rocker Switch, Red	48-0013	1	1	1	1	1
133	Rocker Switch, Green	48-0016	2	2	2	2	2
134	Overlay	82-0492-001	1	1	1	1	1
135	Circuit Breaker (CSD-1 Only)	15-0401-001		1	1	1	1
136	Screw, Machine, Pan HD	57-0353-001		2	2	2	2
137	Binding Post	48-0427-001	1	1	1	1	1
NS	Wire Harness, Fenwal Flame Signal	40-0429-001	1	1	1	1	1
NS	Valve Proving System Replacement Kit	75-0415-001			1 (NG)	1 (NG)	1 (NG)
NS	Wire Harness, Display	40-0115-001	1	1	1	1	1
NS	Wire Harness, Blower Motor & Flow Sensor	40-0401-001	1	1	1	1	1
NS	Wire Harness, Ignition Control Module	40-0403-003	1	1	1	1	1
NS	Wire Harness, 120 & 24VAC to J14	40-0405-005	1	1	1	1	1

Torus Parts List - 300 - 1000

Ref No.	Description	Part No.	300 - 400	500	650	800	1000
NS	Wire Harness, SSR to Blower Motor Power (120V)	40-0406-003	1	1	1	1	1
NS	"Wire Harness, Operator to Electrical Panel, Xylem LWCO (Verfiy before ordering)"	40-0408-003	1	1	1	1	1
NS	"Wire Harness, Electrical Panel Disconnect, Taco LWCO (Verfiy before ordering)"	40-0407-001	1	1	1	1	1
NS	"Wire Harness, Control Panel Disconnect, Taco LWCO (Verfiy before ordering)"	40-0407-001	1	1	1	1	1
NS	Wire Harness, J4 to J1 Flow Sensor	40-0415-003	1	1	1	1	1
NS	Wire Harness, Gas Valve to Ignition Control	40-0418-001	1	1	1	1	1
NS	Wire Harness, Ign Control H.V. Out to Spark Electrode	40-0419-001	1				
		40-0419-002		1	1	1	1
NS	Wire Harness, Ign Control B.GND to GND Electrode	40-0419-003	1				
		40-0419-004		1	1	1	1
NS	Wire Harness, Ign Control S1 to Flame Sense Electrode	40-0419-005	1				
		40-0419-006		1	1	1	1

Figure 30 - Exploded View and Replacement Parts, (1251-3001)

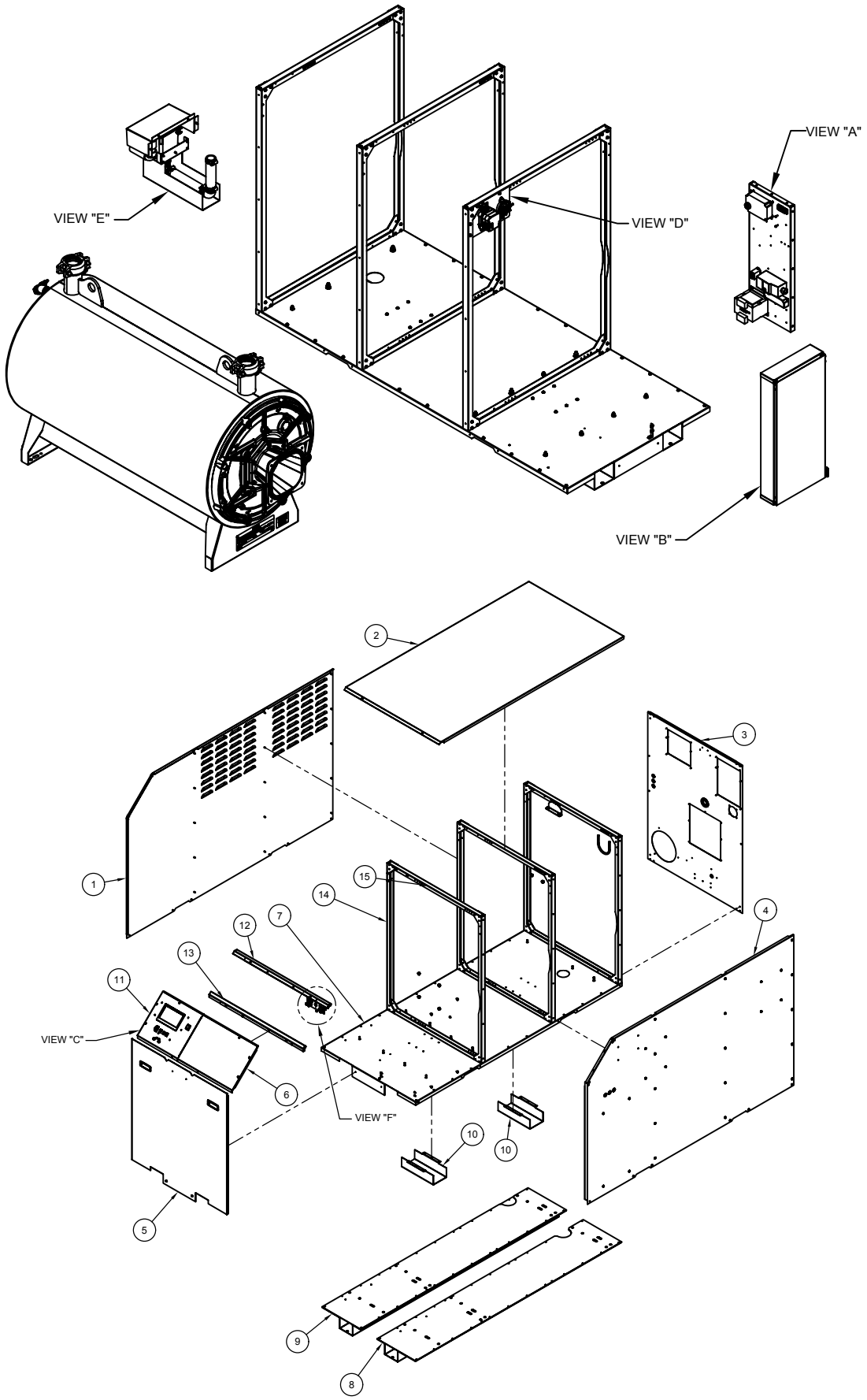

Figure 30 - Exploded View and Replacement Parts, (1251-3001) - Continued

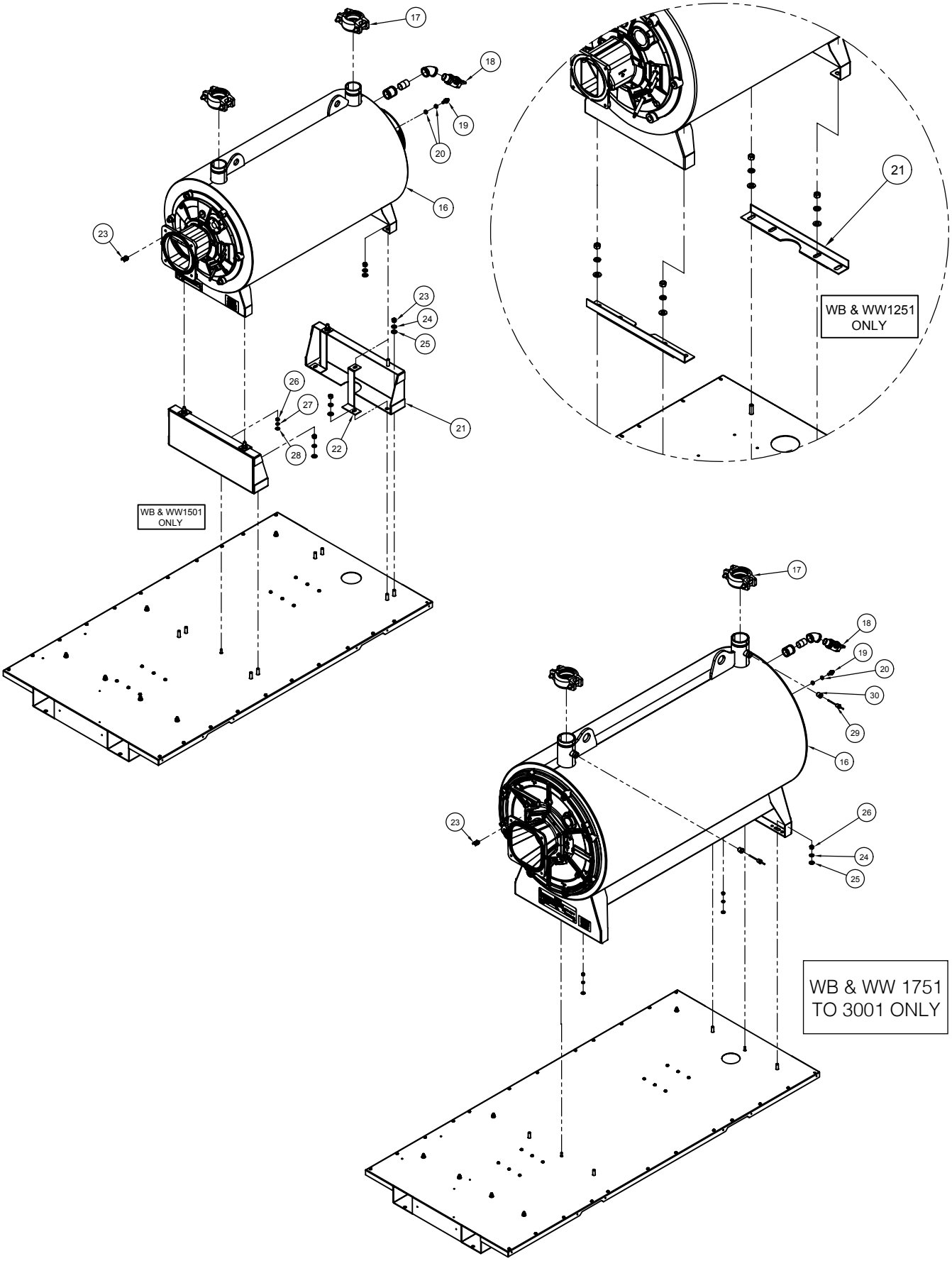

Figure 30 - Exploded View and Replacement Parts, (1251-3001) - Continued

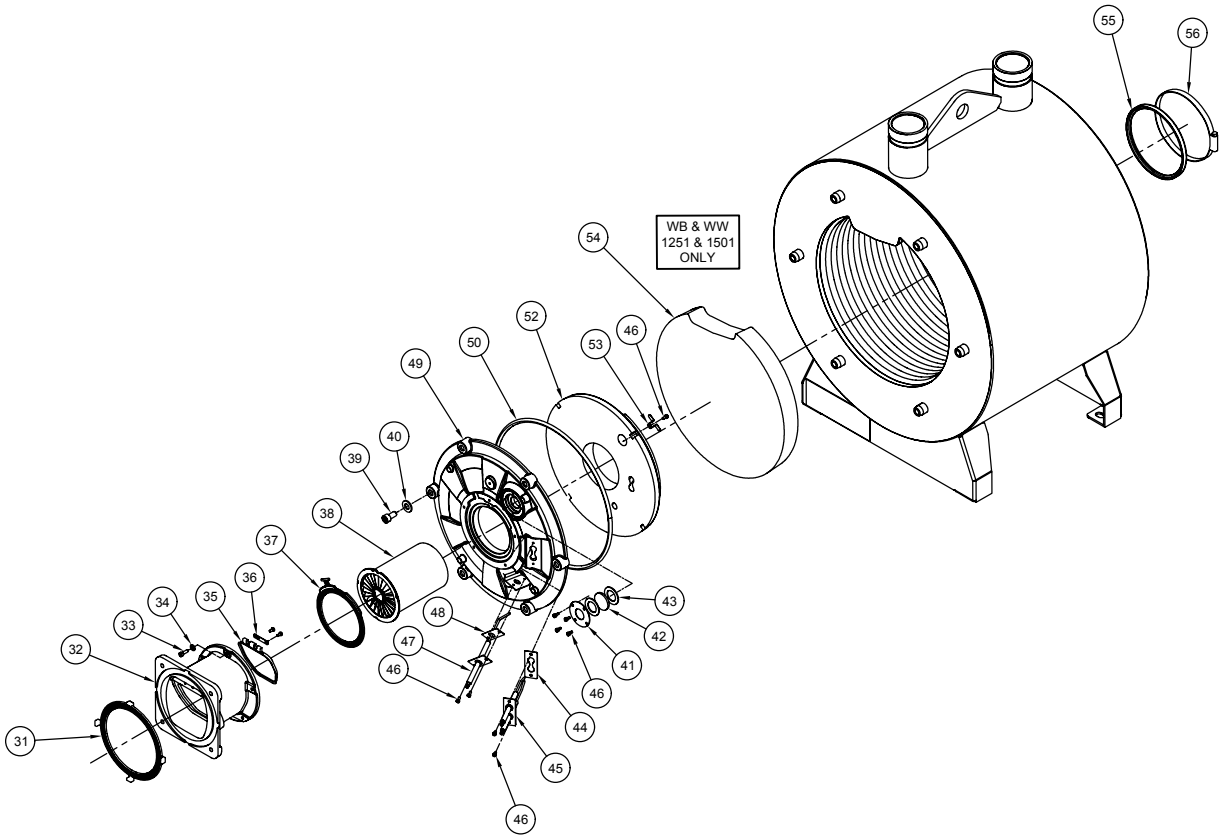

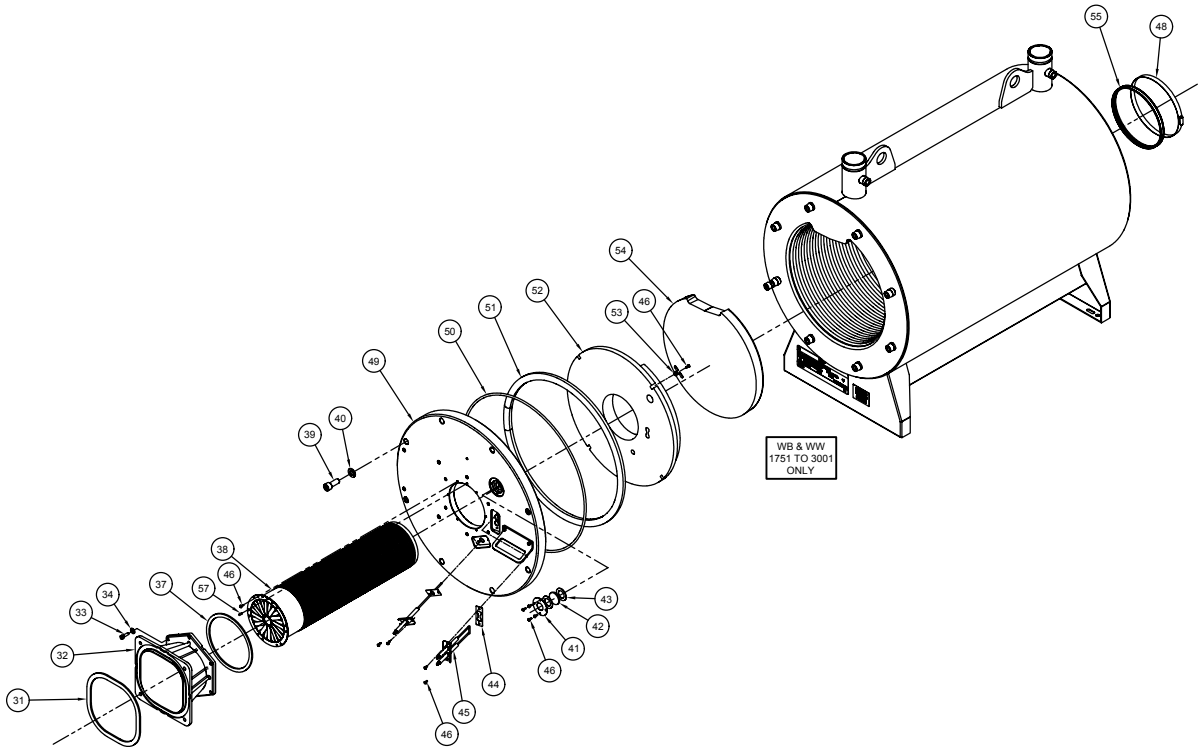

Figure 30 - Exploded View and Replacement Parts, (1251-3001) - Continued

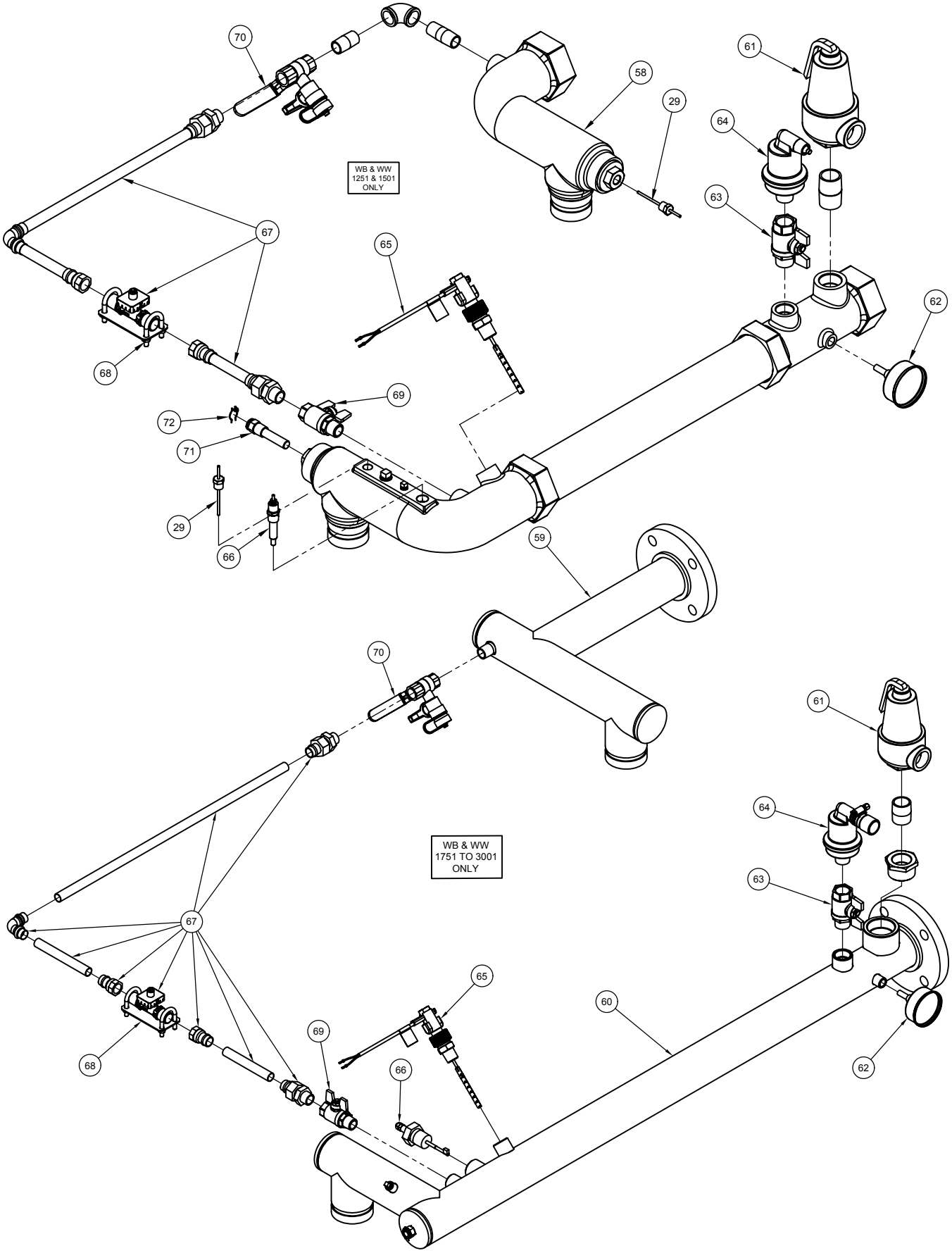

Figure 30 - Exploded View and Replacement Parts, (1251-3001) - Continued

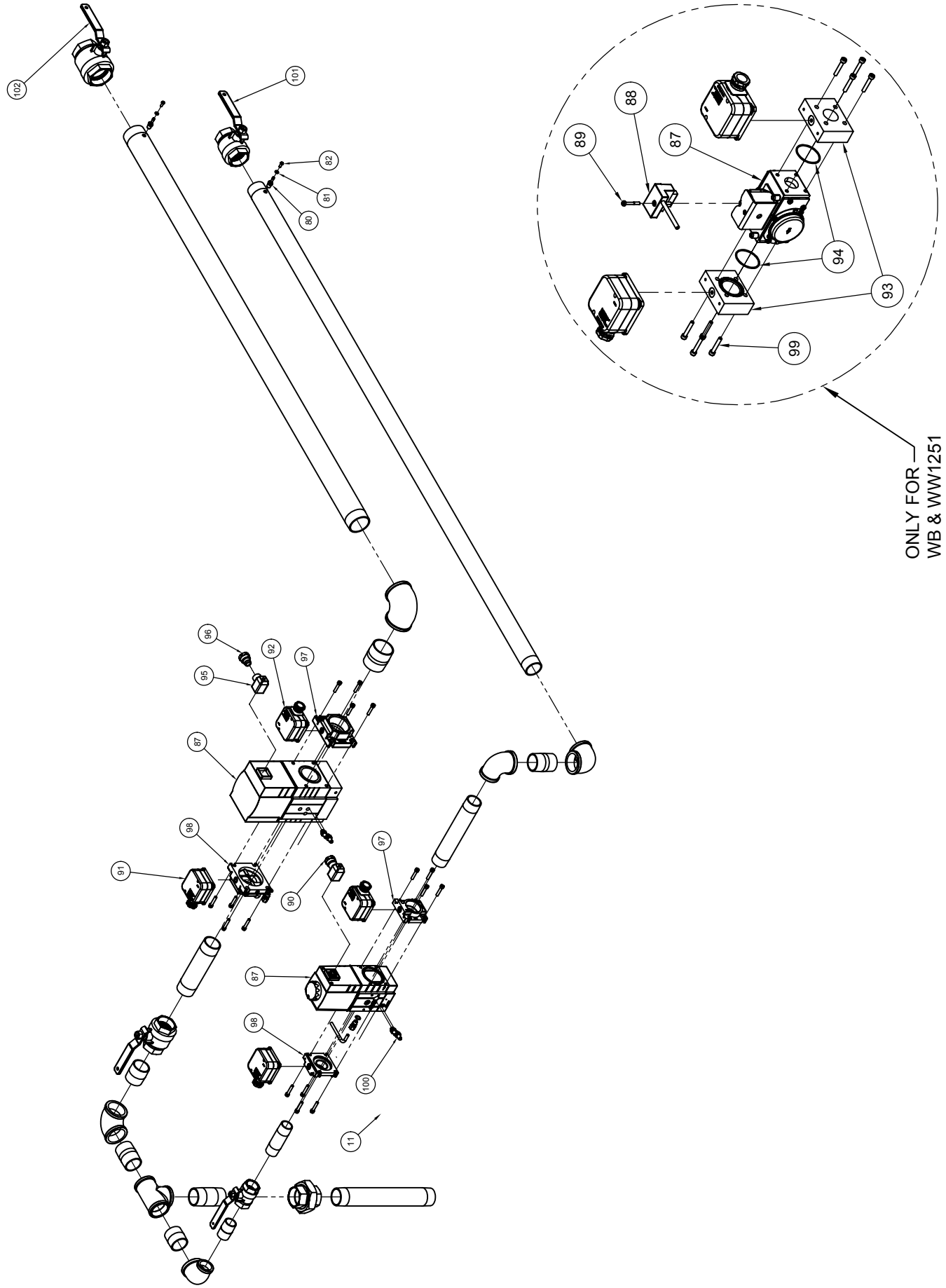

Figure 30 - Exploded View and Replacement Parts, (1251-3001) - Continued

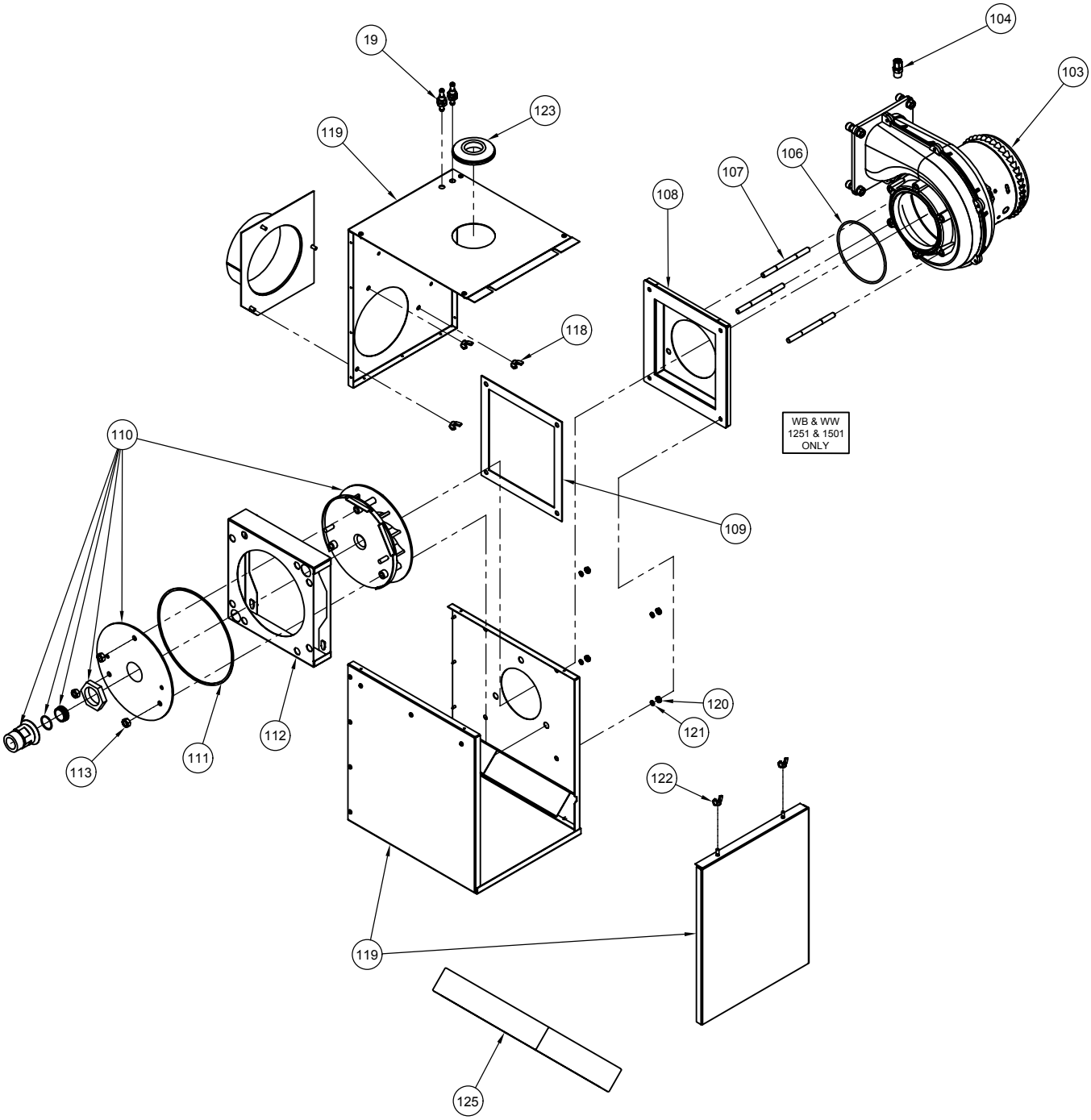

Figure 30 - Exploded View and Replacement Parts, (1251-3001) - Continued

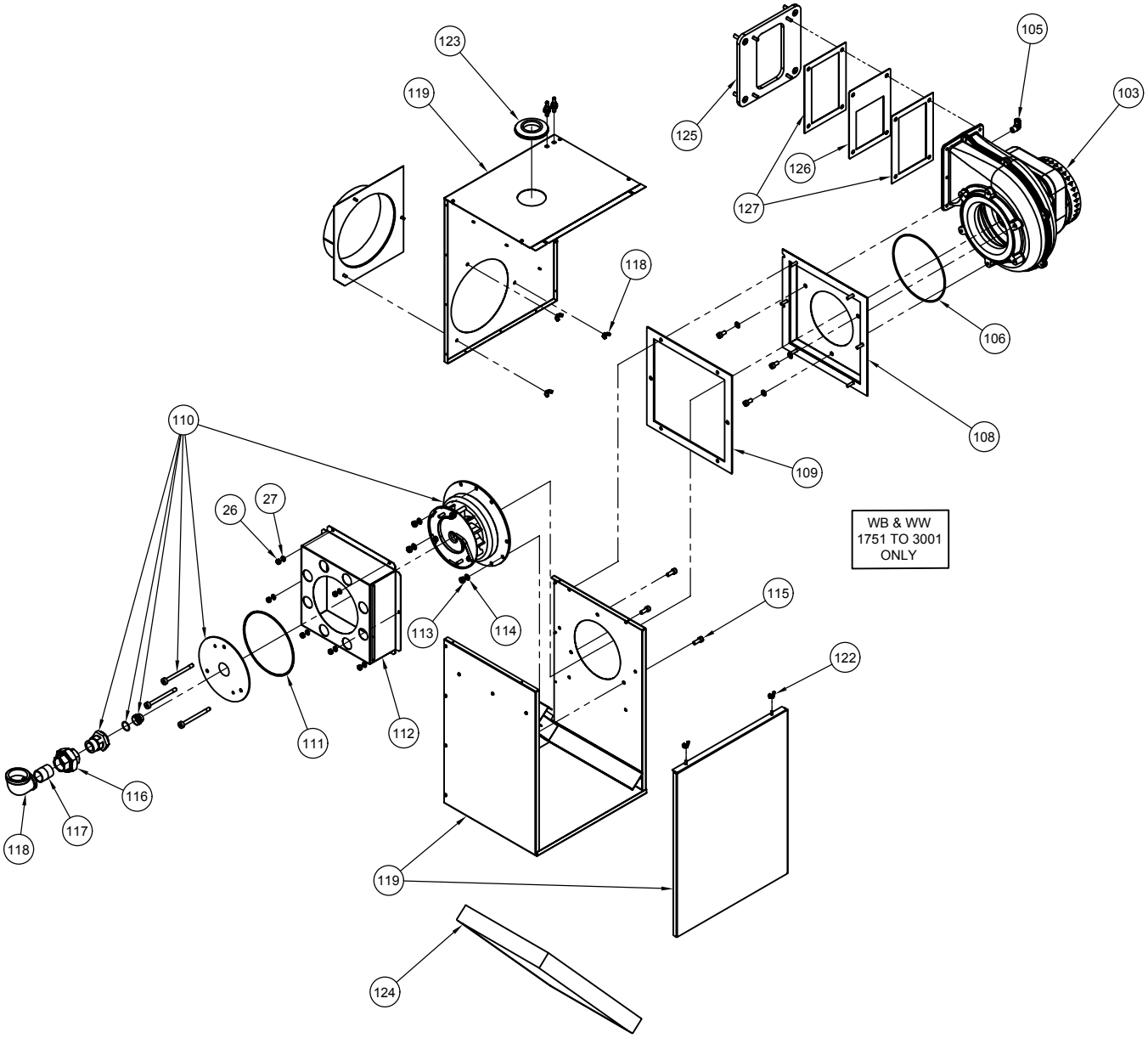

Figure 30 - Exploded View and Replacement Parts, (1251-3001) - Continued

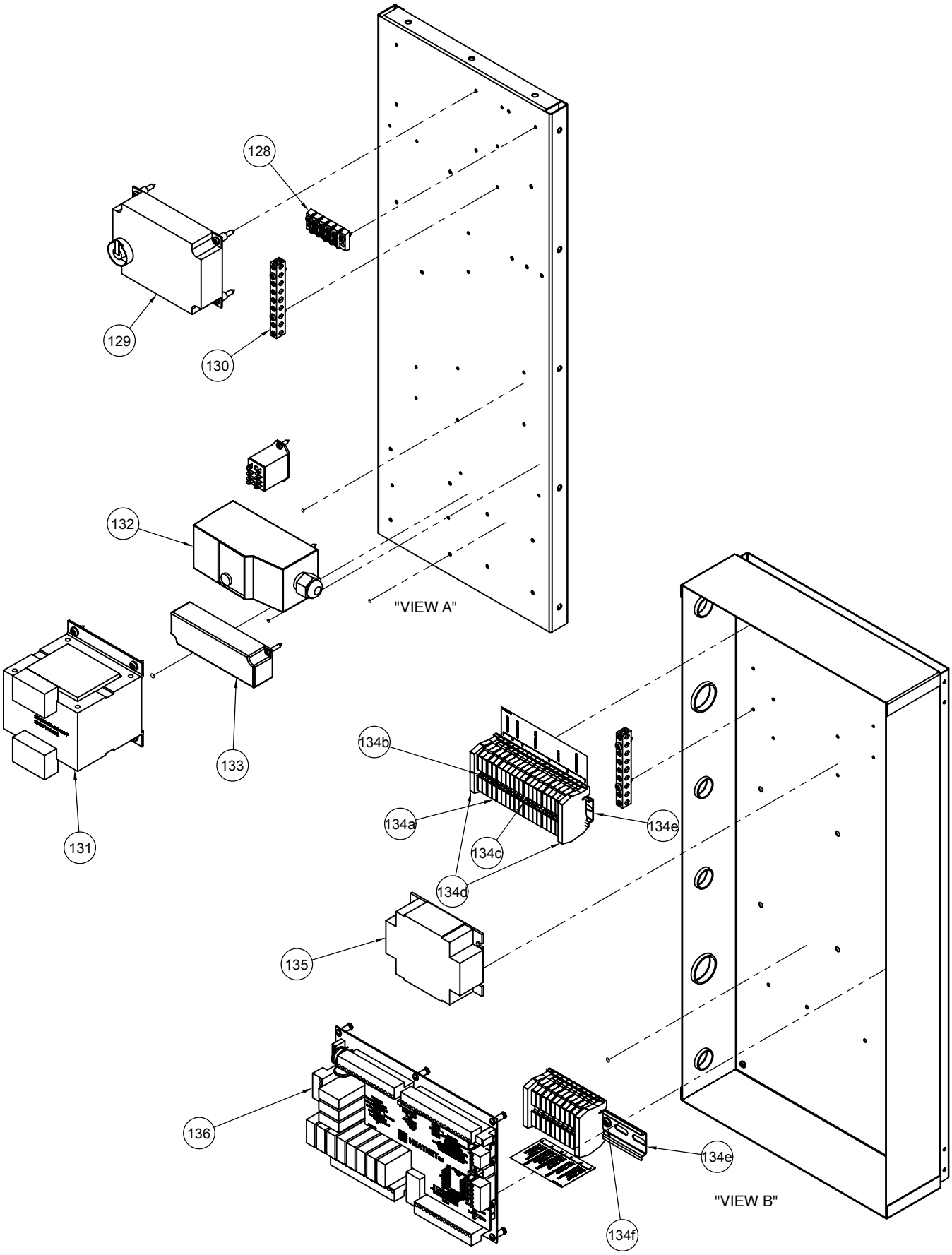

Figure 30 - Exploded View and Replacement Parts, (1251-3001) - Continued

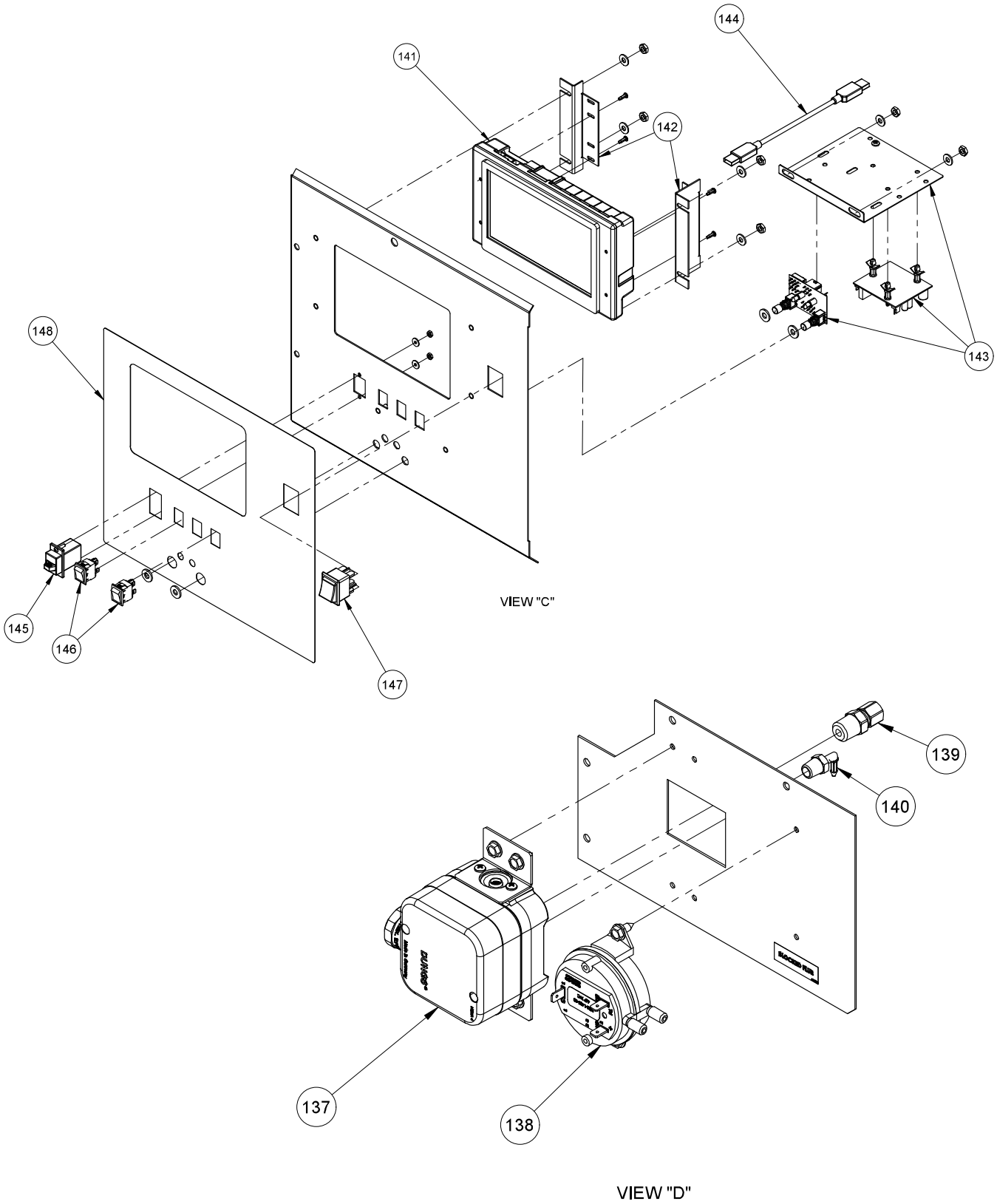

Figure 30 - Exploded View and Replacement Parts, (1251-3001) - Continued

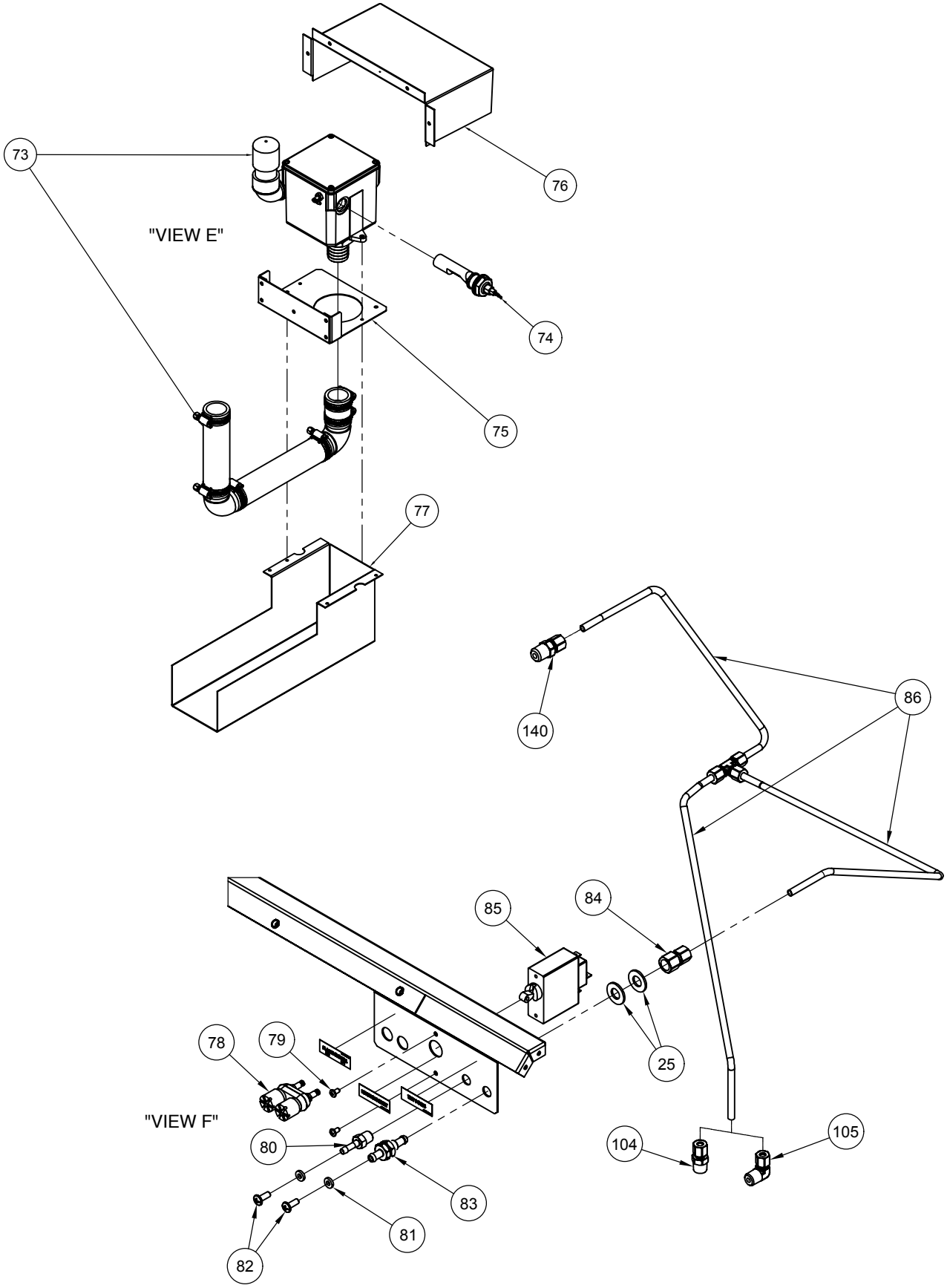

Torus Parts List - 1251 - 3001

Ref No.	Description	Part No.	1251	1501	1751	2001	2501-3001
1	Weldment, LH Panel	74-1038-011	1				
		74-1038-012		1			
		74-1038-013			1	1	
		74-1038-014					1
2	Panel, Top	03-6006-006	1				
		03-6006-007		1			
		03-6006-008			1	1	
		03-6006-009					1
3	Panel, Rear	03-4769-002	1				
		03-4769-003		1			
		03-4769-004			1	1	
		03-4769-005					1
4	Weldment, RH Panel	74-1039-011	1				
		74-1039-012		1			
		74-1039-013			1	1	
		74-1039-014					1
5	Panel, Front	03-6005-001	1				
		03-6005-002		1	1	1	1
6	Panel, Jacket, Blank	03-6008-001	1				
		03-6008-002		1	1	1	1
7	Panel, floor	03-4782-006	1				
		03-4782-007		1			
		03-4782-008			1	1	
		03-4782-009					1
8	Weldment, Leg, RH	74-1033-006	1				
		74-1033-007		1			
		74-1033-008			1	1	
		74-1033-009					1
9	Weldment, Leg, LH	74-1032-006	1				
		74-1032-007		1			
		74-1032-008			1	1	
		74-1032-009					1
10	Leg, Extension	03-4779-001	2	2			
		03-4779-003			2	2	2
11	Assembly, Control Panel (Overlay must be ordered seperately)	75-0602-002	1	1	1	1	1
12	Assembly, Support, Cross Brace, Test Port	75-0601-001	1				
		75-0601-002		1	1	1	1
13	Weldment, Support, Cross Brace	74-1040-002	1				
		74-1040-003		1	1	1	1
14	Support, Vertical	03-4783-001	6				
		03-4783-002		3	3	3	3
	Support, Vertical, Notched	03-4783-003		3	3	3	3
15	Support, Horizontal	03-4784-001	5				
	Support, Horizontal, Notched	03-4784-002	1				
	Support, Horizontal	03-4784-003		6			
		03-4784-004			3	3	
		03-4784-005					5
		03-4784-006			3	3	1
16	Heat Exchanger, Boiler	74-1001-007	1				
		74-1001-006		1			
		74-1003-006			1	1	
		74-1003-007					1
	Heat Exchanger, Water Heater	74-1002-007	1				
		74-1002-006		1			
		74-1004-006			1	1	
		74-1004-007					1
17	Coupling, Grooved	53-6404-004	2	2			
		53-6404-005			2	2	2
18	Ball Valve, T-Handle	11-0471-002	1	1	1	1	1
19	Barbed Fitting	55-0152	3	3	3	3	3
20	O-Ring, Barbed fitting	06-0156-003	2	2	2	2	2
21	Weldment, Heat Exchanger Mounting	74-1035-001	2				
	Weldment, Heat Exchanger Mount, Front	74-1061-001		1			
	Weldment, Heat Exchanger Mount, Rear	74-1061-002		1			
22	Stiffener, Heat Exchanger Mount, Front Right	03-6041-001		1			
	Stiffener, Heat Exchanger Mount, Front Left	03-6041-002		1			
	Stiffener, Heat Exchanger Mount, Rear Right	03-6041-003		1			
	Stiffener, Heat Exchanger Mount, Rear Left	03-6041-004		1			
23	Nut, Hex, 3/8-16	57-0490	4	12	4	4	4
24	Lock Washer, Split, 3/8"	57-0603	4	12	4	4	4
25	Washer, Flat, A, N, 3/8"	57-0563	6	14	6	6	6
26	Nut, Hex, 1/4-20	57-0477		7	10	10	10
27	Lock Washer, Split, 1/4"	57-0601		7	10	10	10
28	Washer, Flat, A, N, 1/4"	57-0554-009		7	4	4	4
29	Sensor, Probes	14-0333-001	2	2	2	2	2

Torus Parts List - 1251 - 3001

Ref No.	Description	Part No.	1251	1501	1751	2001	2501-3001
30	Bushing, 1-1/2 MPT X 1/4 FPT, Reducing (For WB)	53-0662-031	1	1			
	Bushing, 1-1/2 MPT X 1/4 FPT, Reducing, SS (For WW)	53-6079-001	1	1			
	Bushing, 1-1/2 MPT X 3/8 FPT, Reducing (For WB)	53-0662-032	1	1			
	Bushing, 1-1/2 MPT X 3/8 FPT, Reducing, SS (For WW)	53-6079-002	1	1			
	Bushing, CL150, HEX, 3/8 MPT X 1/4 FPT (For WB)	53-0041			2	2	2
	Bushing, CL150, HEX, 3/8 MPT X 1/4 FPT, SS (For WW)	53-0361			2	2	2
31	Intake manifold gasket	22-0115-002	1				
		22-0115-003		1			
		22-0115-004			1	1	1
32	Manifold, Intake	22-0112-002	1				
		22-0112-003		1			
		22-0112-004			1	1	1
33	Intake Manifold Mounting Screw	57-1456-011	1	1			
		57-1458-015			1	1	1
34	Intake Manifold Mounting Washer	57-1101-006	1	1			
		57-1101-009			1	1	1
35	Blower Flap	22-0117-002	1				
		22-0117-003		1			
36	Flap Retainer	22-0111-001	1	1			
37	Burner Gasket	22-0110-001	1	1			
		22-0015-001			1	1	1
38	Burner	22-0109-006	1	1			
		22-0016-003			1	1	
		22-0016-006					1
39	Door Mounting Screw	57-1478-011	6	6			
		57-1479-017			8	8	8
40	Door Mounting Washer	57-1101-010	6	6			
		57-1101-012			8	8	8
41	Lens Mounting Plate	22-0107-001	1	1	1	1	1
42	Lens	22-0007-001	1	1	1	1	1
43	Lens Gasket	22-0008-001	2	2	2	2	2
44	Ignition electrode gasket	22-0011-001	1	1	1	1	1
45	Ignition electrode	22-0108-001	1	1			
		22-0009-001			1	1	1
46	Screw, M4x8	57-1455-006	14	14	18	18	18
47	Gasket, Ionization Electrode	22-0012-001	1	1	1	1	1
		22-0011-001					
48	Ionization Electrode	22-0116-001	1	1	1	1	1
		22-0010-001					
49	Burner Door	22-0106-001	1	1			
		22-0019-001			1	1	1
50	Burner Door Gasket	22-0104-001	1	1			
		22-0013-001			1	1	1
51	Fiber braid	22-0104-001	1	1			
		22-0014-001			1	1	1
52	Burner Door Insulation	22-0105-001	1	1			
		22-0006-001			1	1	1
53	Clip, Burner Door Insulation	22-0001-001	4	4	4	4	4
54	Heat Exchanger Interior Insulation	22-0103-001	1	1			
		22-0005-001			1	1	1
55	Flue Outlet Gasket	22-0102-002	1	1			
		22-0004-001			1	1	1
56	Flue Outlet Clamp	22-0101-002	1	1			
		22-0017-001			1	1	1
57	Burner pin	22-0002-001			1	1	1
58	Casting, Return Header, WB	01-0302-002	1	1			
	Casting, Return Header, WW	01-0501-002	1	1			
59	Weldment, Return Header, WB	74-1024-003			1	1	
		74-1024-004					1
	Weldment, Return Header, WW	74-1027-006			1	1	
		74-1027-007					1
60	Weldment, Header, Supply, WB	74-1051-001	1	1			
		74-1025-006			1	1	
		74-1025-007					1
	Weldment, Header, Supply, WW	74-1052-001	1	1			
		74-1027-006			1	1	
		74-1027-007					1
61	PRV, 50 PSI (WB)	13-0002	1	1	1	1	
	PRV, 50 PSI (WB)	30-0382					1
	T&PRV, 125 PSI (WW)	13-0080	1	1			
		13-0091			1	1	
	T&PRV, 150 PSI (WW)	13-0076					1
62	T&P Gauge, 0 - 250 PSI (WB & WW)	13-0312	1	1	1	1	1
	T&P Gauge, 0 - 100PSI (WB)	13-0313	1	1	1	1	1
63	Ball Valve, 0.750 T Handle, F X M NPT Straight	11-0471-002	1	1	1	1	1
64	Air Vent, 3/4 MPT X 1/2 FPT, Spirotop	13-0352-001	1	1	1	1	1
65	Flow Switch	14-0207	1	1	1	1	1
66	Probe, Low-water cutoff, 0.375 NPT	14-0280-001	1	1	1	1	1
67	"Assembly, Flow Sensor Piping (Cut Tubing to fit prior to installation) (Optional)"	75-0621-002	1	1			
		75-0621-003		1	1	1	1

Torus Parts List - 1251 - 3001

Ref No.	Description	Part No.	1251	1501	1751	2001	2501-3001
68	Flow Sensor, Sika (Optional)	14-0330-002	1	1	1	1	1
69	Ball Valve, 1/2 NPT	11-0471-001	1	1	1	1	1
70	Ball Valve, 1/2 NPT w/ Hose Drain	13-0252-001	1	1	1	1	1
71	Well, 3/8 NPT X 11/16 HEX X 13/32" ID X 3"	13-0104	1	1	1	1	1
72	Sensore Well Wire Clip	48-0405	1	1	1	1	1
73	Assembly, Condensate Trap	75-0582-001	1				
		75-0582-002		1			
		75-0582-003			1	1	1
74	Float Switch	48-0015	1	1	1	1	1
75	Bracket, Condensate Trap	03-4756-001	1	1			
		03-4756-002			1	1	1
76	Cover, Condensate Trap	03-4799-001	1	1			
		03-4799-002			1	1	1
77	Shield, Condensate Trap	03-4798-001	1				
		03-4798-002		1			
		03-4798-003			1	1	1
78	Binding Post	48-0427-001	1	1	1	1	1
79	Screw, Machine, Pan HD	57-0353-001	2	2	2	2	2
80	Test Port, 3/16" Barb X 1/8 MPT X #10--32 tap	53-0315	2 (LP)	2	2	2	2
81	Washer, Rubber	06-0133	4	4	4	4	4
82	Screw, Test Port	57-0391	4	4	4	4	4
83	Fitting, thru wall, 3/16" hose	55-0315	1	1	1	1	1
84	Compression Fitting, 1/4 NPT	55-0001	1	1	1	1	1
85	Circuit Breaker (CSD-1 Only)	15-0401-001	1	1	1	1	1
NS	Wire Harness, Fenwal Flame Signal	40-0429-001	1	1	1	1	1
86	Assembly, Pressure Switch Tubing	75-0608-001	1				
		75-0608-002		1	1	1	1
87	Gas Valve, EBM	11-0726-001	1 (LP)				
	Gas Valve, Dungs MBC 1000	11-0230	1 (NG)	1	1 (LP)	1 (LP)	1 (LP)
	Gas Valve, Dungs MBC2500 257-806	11-0227			1 (NG)	1 (NG)	1 (NG)
88	Connection Box, Harness, EBM	11-0727-001	1 (LP)				
89	Mounting Screw, Harness, EBM	57-0975-005	1 (LP)				
90	Wire Harness, Gas Valve, Dungs	40-0418-001	1 (NG)	1	1	1	1
91	High Gas Pressure Switch	11-0421	1	1	1	1	1
92	Low Gas Pressure Switch	11-0422	1	1	1	1	1
93	Gas Valve Flange, 1 NPT, EBM	04-5007-002	2 (LP)				
94	O-Ring, EBM Gas Valve Flange	06-0095-029	2 (LP)				
NS	Pressure S.W. Port Sealing Screw	57-2491-005	2 (LP)				
95	Hirschman Plug, Dungs D210-319	11-0220	1 (NG)	1	1	1	1
96	Conduit Adapter, Dungs D240-671	11-0221	1 (NG)	1	1	1	1
97	Gas Valve Flange, 1-1/4 NPT, Dungs	11-0237-001	1 (NG)	1 (NG)	1 (LP)	1 (LP)	1 (LP)
	Flange, 1 NPT, Dungs 221-999	11-0231		1 (LP)			
	Flange, 1-1/2 NPT, Dungs 222-003	11-0214			1 (NG)	1 (NG)	
	Flange, 2 NPT, Dungs 221-997	11-0219					1 (NG)
98	Gas Valve Flange, 1 NPT Adjustable Shutter, Dungs	11-0228	1 (NG)	1	1 (LP)	1 (LP)	1 (LP)
	Flange, 1-1/2 NPT Adjustable Shutter, Dungs 255-133	11-0229			1 (NG)	1 (NG)	1 (NG)
99	Screw, EBM Gas Valve Flange	57-1475-016	8 (LP)				
100	Test Port, Dungs	11-0354	2 (NG)	2	2	2	2
101	Ball Valve, 1 NPT	11-0456	1 (LP)	1 (LP)			
	Ball Valve, 1-1/4 NPT	11-0457			1 (LP)	1 (LP)	
102	Ball Valve, 1-1/2 NPT	11-0458	1 (NG)	1 (NG)	1 (NG)	1 (NG)	1 (LP)
	Ball Valve, 2 NPT	11-0459					1 (NG)
103	Blower (120V)	12-0031-001	1				
	Blower (120V)	12-0026-001		1			
	Blower (208-230V 1PH)	12-0032-001			1	1	
	Blower (208 - 230V 3PH)	12-0029-001					1
	Blower (460-600V 3PH)	12-0030-001					1
104	Adapter, 1/4" x MPT, modified	04-5008-001	1				
105	Compression 90, elbow Adapter	55-0017-003		1	1	1	1
106	O-ring, Blower Adapter to Blower	06-0096-001	1				
		06-0096-002		1	1	1	1
107	Studs	57-0211-010	3				
108	Weldment, Blower to Filter box Adapter	74-1045-002	1				
	Weldment, Blower to Filter box Adapter	74-1045-003		1	1	1	1
109	Gasket Tape, EPDM	06-0151	1				
	Gasket, Blower Adapter to Filter Box	06-0214-001		1	1	1	1
110	Swirl Plate Kit, Dungs	11-0658-001	1	1			
		11-0659-001			1	1	1
111	Gasket, Orifice Plate	06-0228-002	1	1	1	1	1
112	Weldment, Mixing Box	74-1046-006	1				
		74-1056-001		1			
		74-1056-002			1		
		74-1056-003				1	
		74-1056-004					1
113	Nut, Hex, GR8, M8-1.25	57-1051-012	6	6	6	6	6
114	Washer, Lock, Helical Spring, 8mm	57-1151-009		3	3	3	3
115	Screw, Socket Head, Hex dr	57-1477-013		3	3	3	3
116	Union, CL150, 1 NPT	53-0054		1	1	1	1
117	Nipple, tbe, SCH40, 1 NPT X 2"	53-0178-002		1	1	1	1

Torus Parts List - 1251 - 3001

Ref No.	Description	Part No.	1251	1501	1751	2001	2501-3001
118	Elbow, CL150, 1-1/2 X 1 NPT	53-0074		1	1	1	1
119	Assembly, Filter Box(Including Filter)	75-0591-002	1				
		75-0624-001		1			
		75-0624-002			1	1	1
120	Nut	57-0510-007	4				
121	Lock washer, Split, #10	57-0619-009	4				
122	Nut, Wing, #10-24	57-0470	5				
123	Pipe Grommet	06-0070	1	1			
		06-0072			1	1	1
124	Filter	09-0503-001	1				
		09-0503-002		1	1	1	1
125	Weldment, Blower Adapter Plate	74-1057-001		1			
		74-1057-002			1	1	1
126	Plate, Blower Outlet Baffle	03-6042-001					1
127	Gasket, Blower Outlet	06-0209		1	1	1	2
128	Terminal Block, Power Supply	48-0195-003	1	1	1	1	1
129	Ignition Control Module, Fenwal	16-0063-001	1	1	1	1	1
130	Ground Bar	48-0446	2	2	2	2	2
131	Transformer, 120V to 24V, 50VA	15-0007	1	1	1	1	
	Transformer, 208-230-480-600VAC PRI, 25-120VAC SEC, 250VA, 1PH, 50-60HZ	15-0040-001					1
132	High Limit, Manual Reset	14-0127	1	1	1	1	1
N/S	High Limit, Auto Reset	14-0115	1	1	1	1	1
133	Power Supply, 120V to 12V	15-0352	1	1	1	1	1
134a	Terminal Block, Screwless Feed Through	48-0178-002	28	28	28	28	28
134b	Terminal Block Jumper, 24 Pole	48-0181-002	1	1	1	1	1
134c	Terminal Block Cover	48-0182-001	10	10	10	10	10
134d	Terminal Block, End Bracket	48-0185-001	4	4	4	4	4
134e	Din Rail	48-0356-0538	2	2	2	2	2
134f	Srew, AB, Pan HD, Phillips, #10, ZP Steel	57-0033-007	4	4	4	4	4
135	Relay, Solid State, 100-240VAC, 25A, 1PH	15-0137	1	1			
	Relay, Solid State, 660VAC, 25A, 24-275VAC control, 3PH	15-0142-001			1	1	1
136	Board, HeatNet, Full, Sata	40-0092	1	1	1	1	1
137	Pressure Switch, 0.16-1.2" WC	14-0071	1	1	1	1	1
138	Pressure Switch, 4.0" WC	14-0070	1	1	1	1	1
139	Compression Fitting, Elbow, 1/8NPT	55-0065-001	1	1	1	1	1
140	Adapter, 1/4" CC X MPT	55-0008	1	1	1	1	1
141	Touch Screen Display	40-0091-002	1	1	1	1	1
142	Bracket, Touch Screen Display	03-4719-001	2	2	2	2	2
143	Assembly, Taco LWCO & Interface Board	75-0030-003	1	1	1	1	1
144	USB Cable	44-0065	1	1	1	1	1
145	USB Port	44-0064	1	1	1	1	1
146	Rocker Switch, Green	48-0016	2	2	2	2	2
147	Rocker Switch, Red	48-0013	1	1	1	1	1
148	Overlay	82-0760-001	1	1	1	1	1
NS	Sheet Metal AB Screw, #10	57-0072-007	20	20	20	20	20
NS	Valve Proving System Replacement Kit	75-0415-001	1 (NG)	1 (NG)/1 (LP)	1 (NG)/1 (LP)	1 (NG)/1 (LP)	1 (NG)/1 (LP)
NS	Wire Harness, Display	40-0115-001	1	1	1	1	1
NS	Wire Harness, Blower Motor & Flow Sensor	40-0401-001	1	1	1	1	1
NS	Wire Harness, Ignition Control Module	40-0403-003	1	1	1	1	1
NS	Wire Harness, 120 & 24VAC to J14	40-0405-005	1	1	1	1	1
NS	Wire Harness, SSR to Blower Motor Power (120V)(208-230V 1PH)	40-0406-003	1	1			
NS	Wire Harness, SSR to Blower Motor Power (208-230V 3PH)	40-0406-005			1	1	1
NS	Wire Harness, SSR to Blower Motor Power (460/575V 3PH)	40-0406-004					1
NS	Wire Harness, Electrical Panel Disconnect, Taco LWCO	40-0407-001	1	1	1	1	1
NS	Wire Harness, Control Panel Disconnect, Taco LWCO	40-0407-002	1	1	1	1	1
NS	Wire Harness, J4 to J1 Flow Sensor	40-0415-003	1	1	1	1	1
NS	Wire Harness, Gas Valve to Ignition Control	40-0418-001	1	1	1	1	1
NS	Wire Harness, Ign Control H.V. Out to Spark Electrode	40-0419-001	1	1	1		
		40-0419-002				1	1
NS	Wire Harness, Ign Control B.GND to GND Electrode	40-0419-003	1	1	1		
		40-0419-004				1	1
NS	Wire Harness, Ign Control S1 to Flame Sense Electrode	40-0419-005	1	1	1		
		40-0419-006				1	1

START-UP REPORT

DATE:	JOB NAME:
TECHNICIAN:	LOCATION:
COMPANY:	MODEL:
PHONE NUMBER:	SERIAL #:

PRE-STARTUP CHECK LIST

- ❑ NO VISIBLE DAMAGE TO UNIT
- ❑ PIPING PROPERLY CONNECTED
- ❑ BOILER CIRCULATOR WIRED
- ❑ VENT/STACK CONNECTED
- ❑ INLET AIR FILTER INSTALLED AND CLEAN
- ❑ PROPER SERVICE CLEARANCES PROVIDED
- ❑ PUMP RUNNING, HEAT EXCHANGER FULL
- ❑ GAS LINES PURGED, NO LEAKS, NO MISSING TEST PLUGS

BOILER START UP SEQUENCE

Note: Locate the S2 Calibration Switch and low fire hold switch in the bottom-right of the electrical panel on the main HeatNet board. Also locate the manometer pressure taps (Figures 21 & 22).

1. Check spark gap and flame rod position: (follow section “Checking, Adjustment & Operation”).
2. Perform pre-start up checks and set up: (follow section "Operating Instructions"; Steps 1-10).
3. Disable any external call for heat and toggle the remote/local switch to REMOTE.
4. Ignition and low fire adjustment: Toggle the LOW FIRE switch to cycle the boiler to low fire ignition (follow section "Operating Instructions"; Steps 11-16).
5. Check flame current: (follow section "Measure Flame Current").
6. Set min % and low fire combustion values: (follow section "Operating Instructions"; Step 17).
7. Record combustion, Blower RPM and Delta P at low fire.
8. Set max % and high fire combustion values; (follow section "Operating Instructions"; Step 18).
9. Record combustion, Blower RPM and Delta P at high firing rate.
10. Check all combustion results using a calibrated flue gas analyzer.
11. Release the LOW FIRE switch to place boiler in standby.

NOTICE In addition to completing the Torus Series start-up report, complete the control set-up information in the rear of the HeatNet manual.

COMBUSTION ANALYSIS	MINIMUM FIRING RATE	100% FIRING RATE
GAS INLET PRESSURE (WC)	INCHES WC	INCHES WC
CO_2	%	%
O_2	%	%
BLOWER (RPM)	RPM	RPM
CO (PPM)	PPM	PPM
NET STACK TEMPERATURE	°F	°F
AIR BOX DIFFERENTIAL (DELTA P - WC)	INCHES WC	INCHES WC

SAFETY TEST CHECKLIST

- ❑ **FLOW SWITCHES** (By Others)
- ❑ **LOW WATER CUT-OFF**
- ❑ **AIR SWITCH**
- ❑ **HIGH LIMITS**
- ❑ **FLAME SAFEGUARD**

COMMISSIONING THE BOILER

- ❑ **UNIT CYCLED MINIMUM OF 15 TIMES**
- ❑ **CUSTOMER INSTRUCTED**
- ❑ **ALL COVERS REPLACED**
- ❑ **CUSTOMER GIVEN MANUAL**
- ❑ **TARGET TEMPERATURE SET PER CUSTOMER**

COMMISSIONED BY: _____
(SIGNATURE)

DATE: _____

THE DELTA T BETWEEN THE HEATER INLET AND OUTLET IS CRITICAL TO PROPER FLOW. BEFORE YOU LEAVE THE JOBSITE, YOU MUST RECORD THE DELTA T.

DELTA T = [ ]

ADDITIONAL NOTES AND COMMENTS

MACODE-3

NOTICE! Commonwealth of Massachusetts Installation Requirements

(a) For all side wall horizontally vented gas fueled equipment installed in every dwelling, building or structure used in whole or in part for residential purposes, including those owned or operated by the commonwealth and where the side wall exhaust vent termination is less than seven (7) feet above finished grade, in the area of the venting, including but not limited to decks and porches, the following requirements shall be satisfied:

1. INSTALLATION OF CARBON MONOXIDE DETECTORS. At the time of installation of the side wall horizontal vented gas fueled equipment, the installing plumber or gasfitter shall observe that a hard wired carbon monoxide detector with an alarm and battery back-up is installed on the floor level where the gas equipment is to be installed. In addition, the installing plumber or gasfitter shall observe that a battery operated or hard wired carbon monoxide detector with an alarm is installed on each additional level of the dwelling, building or structure served by the side wall horizontal vented gas fueled equipment. It shall be the responsibility of the property owner to secure the services of qualified licensed professionals for the installation of hard wired carbon monoxide detectors.
   a. In the event that the side wall horizontally vented gas fueled equipment is installed in a crawl space or an attic, the hard wired carbon monoxide detector with alarm and battery back-up may be installed on the next adjacent floor level.
   b. In the event that the requirements of this subdivision can not be met at the time of completion of installation, the owner shall have a period of thirty (30) days to comply with the above requirements; provided, however, that during said thirty (30) day period, a battery operated carbon monoxide detector with an alarm shall be installed.
2. APPROVED CARBON MONOXIDE DETECTORS. Each carbon monoxide detector as required in accordance with the above provisions shall comply with NFPA 720 and be ANSI/UL 2034 listed and IAS certified.
3. SIGNAGE. A metal or plastic identification plate shall be permanently mounted to the exterior of the building at a minimum height of eight (8) feet above grade directly in line with the exhaust vent terminal for the horizontally vented gas fueled heating appliance or equipment. The sign shall read, in print size no less than one-half (1/2) inch in size, “GAS VENT DIRECTLY BELOW. KEEP CLEAR OF ALL OBSTRUCTIONS”.
4. INSPECTION. The state or local gas inspector of the side wall horizontally vented gas fueled equipment shall not approve the installation unless, upon inspection, the inspector observes carbon monoxide detectors and signage installed in accordance with the provisions of 248 CMR 5.08(2)(a)1 through 4.

⚠WARNING Improper venting can result in excessive levels of carbon monoxide which can cause severe personal injury or death!

In the Commonwealth of Massachusetts, the installation must be performed by a licensed plumber or gas fitter.

(b) Exemptions

The following equipment is exempt from 248 CMR 5.08(2)(a) 1 through 4:

1. The equipment listed in Chapter 10 entitled “Equipment Not Required To Be Vented” in the most current edition of NFPA 54 as adopted by the Board; and
2. Product Approved side wall horizontally vented gas fueled equipment installed in a room or structure separate from the dwelling, building or structure used in whole or in part for residential purposes.

(c) MANUFACTURER REQUIREMENTS - GAS EQUIPMENT VENTING SYSTEM PROVIDED.

When the manufacturer of Product Approved side wall horizontally vented gas equipment provides a venting system design or venting system components with the equipment, the instructions provided by the manufacturer for installation of the equipment and the venting system shall include:

1. Detailed instructions for the installation of the venting system design or the venting system components; and
2. A complete parts list for the venting system design or venting system.

(d) MANUFACTURER REQUIREMENTS – GAS EQUIPMENT VENTING SYSTEM NOT PROVIDED.

When the manufacturer of a Product Approved side wall horizontally vented gas fueled equipment does not provide the parts for venting the flue gases, but identifies “special venting systems”, the following requirements shall be satisfied by the manufacturer:

1. The referenced “special venting system” instructions shall be included with the appliance or equipment installation instructions; and
2. The “special venting systems” shall be Product Approved by the Board, and the instructions for that system shall include a parts list and detailed installation instructions.

(e) A copy of all installation instructions for all Product Approved side wall horizontally vented gas fueled equipment, all venting instructions, all parts lists for venting instructions, and/or all venting design instructions shall remain with the appliance or equipment at the completion of the installation.

⚠WARNING Improper venting can result in excessive levels of carbon monoxide which can cause severe personal injury or death!

Torus Series
Boilers/Water Heaters

LIMITED WARRANTY

The specific company or business unit that manufactured the products purchased ("Manufacturer") warrants exclusively to the original owner at the original installation site (hereinafter "Owner") that the heat exchanger provided in and the parts comprising the Industrial, Commercial, and other Non-Residential Use Torus Series Boiler (the "Boiler Product") and Torus series modulating water boiler ("Water Heater Product") (collectively "Products") will be free from defects in material and workmanship for the periods set forth below in the Warranty Effective Periods A, B, C and D. All warranty claims are subject to, and contingent upon, Owner following the terms of the Warranty claim service procedure set forth below as well as the specific Product requirements set forth in the Warranty Effective periods A, B C., and D. below. Failure to do shall void the warranty.

Warranty claim service procedure

1. **Owner must first obtain a Return Material Authorization ("RMA") from the manufacturer before returning any Products.**
2. **Products must be returned to the Manufacturer at Owner's expense, including packaging, transportation and any applicable VAT and import duty costs, and risk of loss or damage to the manufacturer's factory set forth when obtaining the RMA.**
3. **Manufacturer shall evaluate the returned Products purported to be defective due to defects in material or Manufacturer's workmanship and will determine in its reasonable and sole discretion if indeed such defects have occurred.**
4. **If indeed the Product is determined to be defective due to defects in material or Manufacturer's workmanship, Manufacturer shall either repair or replace, at its option, the Product.**
5. **Repaired or replacement Products shall be returned to Owner on an EXW (Ex Works basis, Incoterms 2020 or current version) at Owner's expense and risk.**
6. **The repaired or replacement Products returned to Owner shall be warranted only for the remainer of the original warranty effective period and the repair or replacement of Product shall not extend the effective period of the original warranty on the Product.**

Warranty Effective Periods/ Product Requirements

A. One-Year Warranty

The "Manufacturer" warrants to the Owner that the parts comprising the Torus Series boiler and water heater ("Product") will be free from defects in material and workmanship for one (1) year from the date of installation or eighteen (18) months from the date of shipment from the factory whichever comes first except where otherwise noted herein below.

B. Five-Year Warranty

The manufacturer further warrants to the Owner that the Heat Exchanger provided in the Water Heater Products will be free from defects from condensate corrosion and in material and workmanship for a period of five years (non prorated) from the date of installation or sixty-six (66) months from the date of shipment from the factory, whichever occurs first contingent upon the following: This Water Heater Product is designed to operate scale free, maintaining a water hardness between 4 and 12 grains per gallon with a level of dissolved solids not exceeding 350 ppm. Water having a hardness less than 4 grains can cause excessive corrosion of the heat exchanger. Water that has a hardness greater than 12 grains per gallon and/or a level of dissolved solids exceeding 350 ppm will require a larger circulating pump. Water hardness greater than 15 grains per gallon will require a water softener system. (See Installation Instructions for proper pump performance.) Failure to follow any of these requirements will void the warranty.

C. Ten-Year Warranty

The manufacturer further warrants to the Owner that the Heat Exchanger provided in the Boiler Products will be free from defects from condensate corrosion and in material and workmanship for a period of ***either*** ten (10) years (non prorated) from the date of installation or one hundred twenty-six (126) months from the date of shipment from the factory, whichever occurs first provided that (i) Suspended solids such as magnetite, Iron Oxides were flushed from the system prior to commissioning the boiler(s), (ii). The system fill water did not at any time contain more than 500 ppm of dissolved solids, did not contain less than 150 ppm chloride concentration and was not greater than 200 ppm hardness, (iii) the PH level must be, and have been, at all times, within 6.5-8.5 range, (iv) the system has been protected by the addition of a corrosion inhibitor where required by either the chemical supplier's or manufacturer's instructions,(v) A minimum system pressure of (20 psig, 138, kPa) has been maintained at boiler operating conditions - (30 psig, 207 kPa is required for glycol systems) and (vi) for systems that require glycol for freeze protection, the use of a glycol/water mix that prevents foaming is mandatory because air entrapped within foam significantly decreases heat transfer and can result in damage to the heat exchanger. Failure to follow any of these requirements will void the warranty.

D. Twenty-One Year Thermal Shock Warranty

The manufacturer further warrants to the Owner that the Heat Exchangers in the Products will be warranted for twenty-one (21) years against thermal shock when installed in a closed loop hot water system. This warranty does not cover damage due to corrosion, scaling, sooting or to improper installation practices as set forth in the Exclusions to the Limited Warranty below. The inlet / outlet temperature differential across the boiler heat exchanger must not exceed requirements stated in the Installation Instructions. Failure to follow these guidelines will void the warranty.

Exclusions to This Limited Warranty all exclusions will be determined in the sole discretion of Manufacturer:

a. Any expenses, including manufacturer's on-site labor or material, incurred during the removal or reinstallation of the product or replacement parts thereof all of which are the responsibility of the Owner.

b. Products that have been subjected to misuse or neglect, have been accidentally or intentionally damaged, has not been installed, maintained or operated in accordance with the manufacturer's furnished written instructions or manuals, or has been altered or modified in anyway by any person other than those authorized in writing by the Manufacturer to do so. Chemical corrosion from corrosive chemicals (freon, dry cleaning chemicals, degreasing liquids, chlorine or any chemicals that produce hydrochloric acid) that may be present in the boiler room can rapidly destroy the heating equipment and void the warranty.

c. Products that were not properly installed, maintained (serviced annually) or operated by a qualified contractor in accordance with the Manufacturer's furnished written instructions, or meet the good practice as defined by the industry's accepted authority, or were altered or modified in anyway by any person other than those authorized in writing by the Manufacturer to do so.

d. To burners, jackets, controls and other auxiliary equipment furnished by the manufacturer, but manufactured by others. Any warranties for such items shall be limited to those warranties offered by the original equipment manufacturer.

e. Damage associated with or caused by the installation of the Products regardless of whether the installer, provided by the Owner, is considered, or was authorized by Manufacturer, to be a qualified contractor, to perform the installation. The installation contractor is solely and exclusively responsible to the Owner for its own work and the results thereof.

f. Lime build-up in the heat exchanger tubes caused by excessive water hardness.

THIS LIMITED WARRANTY IS THE EXCLUSIVE WARRANTY TO THE TORUS SERIES WATER BOILERS/WATER HEATERS AND IS IN LIEU OF ALL OTHER WARRANTIES, EXPRESS OR IMPLIED, OF ANY KIND AND SUPERSEDES ALL OTHER WARRANTIES, INCLUDING THOSE CONTAINED IN OTHER DOCUMENTS WHICH MIGHT HAVE BEEN INCLUDED WITH THE PRODUCTS OR BOILERS AT THE TIME OF SHIPMENT. THE REMEDIES UNDER THIS WARRANTY ARE EXCLUSIVE TO THE ORIGINAL OWNER ("OWNER") AT THE ORIGINAL PLACE OF INSTALLATION AND MANUFACTURER NEITHER ASSUMES NOR AUTHORIZES ANYONE TO OFFER OR ASSUME FOR IT ANY OTHER OBLIGATIONS. THIS WARRANTY GIVES OWNER SPECIFIC LEGAL RIGHTS HOWEVER IN NO EVENT SHALL MANUFACTURER BE LIABLE FOR ANY DIRECT DAMAGES THAT EXCEED THE ORIGINAL SALE PRICE OF THE PRODUCTS SOLD TO OWNER THAT ARE FOUND TO BE DEFECTIVE, SPECIAL, INDIRECT, CONSEQUENTIAL, PUNITIVE OR INCIDENTAL DAMAGES OF ANY KIND, OR ON-SITE LABOR, EXPENSES OF ANY KIND, LOST PROFITS, LOST OPPORTUNITIES, OR SIMILAR DAMAGES OF ANY KIND; AND REGARDLESS OF THE LEGAL THEORY OR CAUSES OF ACTION BY WHICH CLAIMS FOR ANY SUCH DAMAGES AS SET FORTH IN THE ENTIRETY OF THE DOCUMENTS RELATED TO THE SALE OF THE BOILER CONTRACT ARE ADVANCED, WHETHER OR NOT MANUFACTURER HAS BEEN ADVISED OF THE POSSIBILITY OF ANY SUCH DAMAGES.

RBI®
RELIABLE. BOLD. INNOVATIVE.

260 North Elm Street
Westfield, MA 01085
Phone: (833) 265-5371

7555 Tranmere Drive
Mississauga, Ontario L5S 1L4 Canada
Phone: (905) 670-5888

www.rbiwaterheaters.com

A MESTEK COMPANY